REV	DESCRIPTION	DRAWN	DATE
		APPROVED	DATE

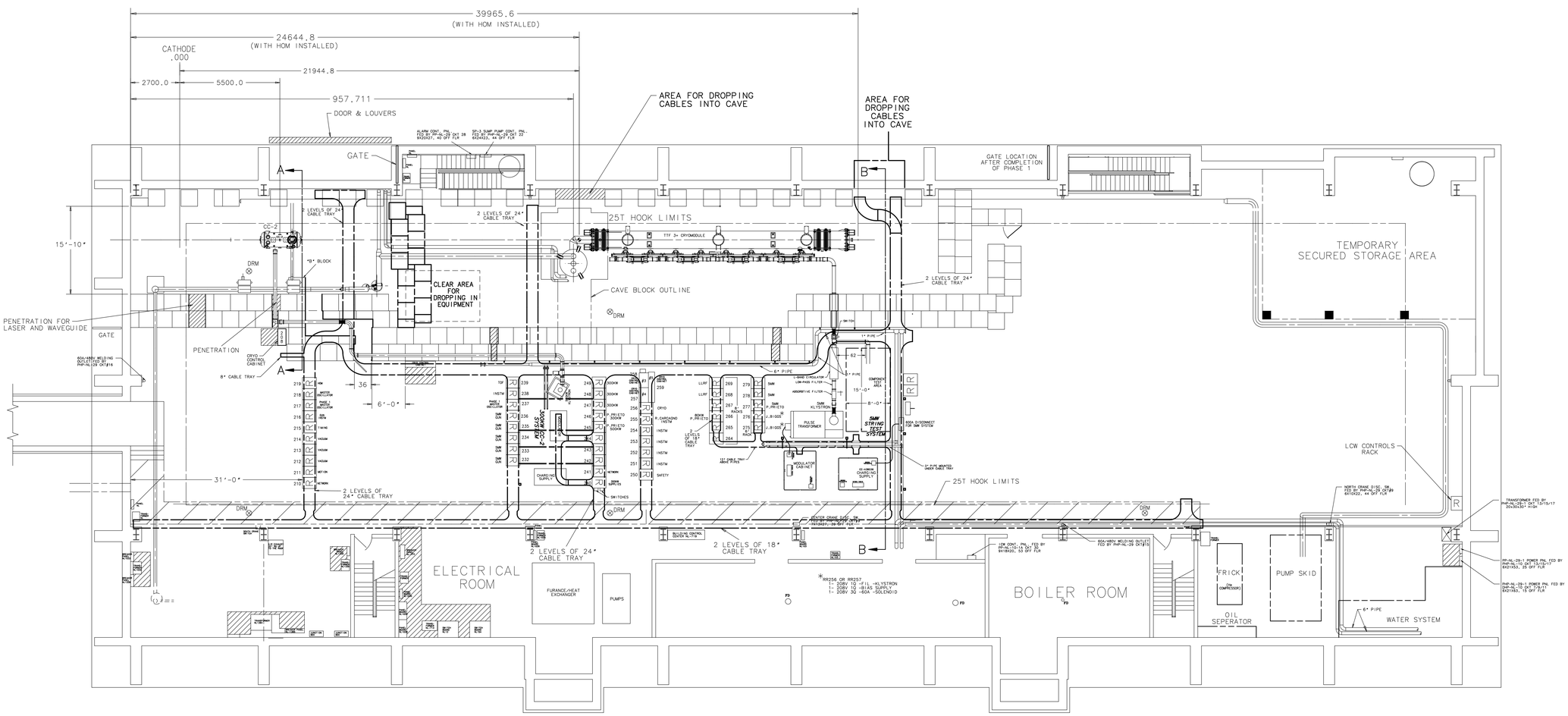

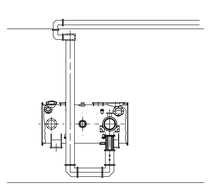

SECTION H-H
SCALE 1/4"=1'-0

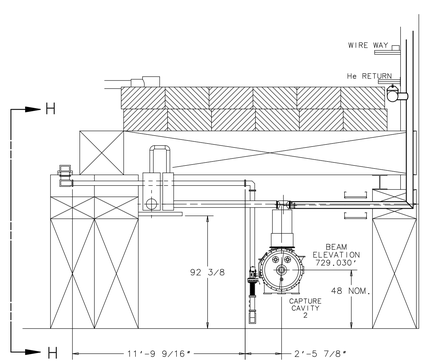

SECTION A-A
SCALE 1/4"=1'-0

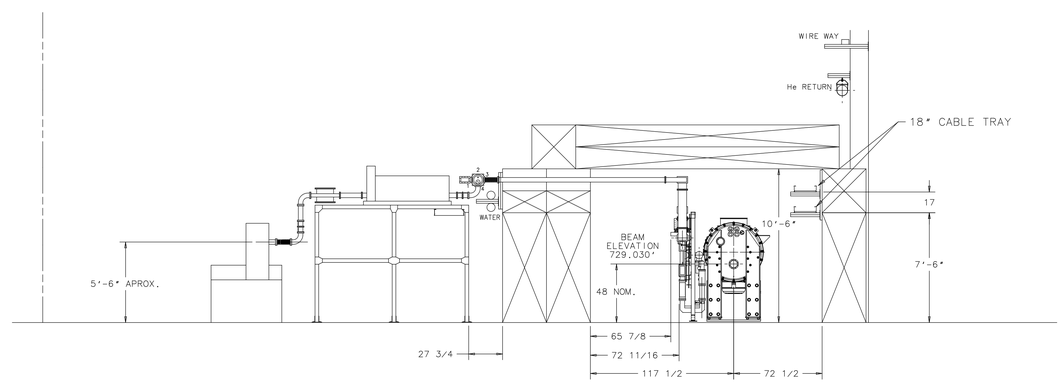

SECTION B-B
SCALE 1/4"=1'-0

MAY 11, 2009

UNLESS OTHERWISE SPECIFIED	ORIGINATOR	NAGAITSEV/LEIBFRITZ	25-SEP-2008
	DRAWN	S.WESSELN	25-SEP-2008
± ± ±	CHECKED		
1. BREAK ALL SHARP EDGES MAX.	APPROVED		
2. DO NOT SCALE DRAWING. 3. DIMENSIONS BASED UPON ASME Y14.5M-1994 4. MAX. ALL MACH. SURFACES	USED ON		
5. DRAWING UNITS: U.S. INCH	MATERIAL		

FERMI NATIONAL ACCELERATOR LABORATORY
UNITED STATES DEPARTMENT OF ENERGY

NML TEST AREA
SCRF ACCELERATOR
EQUIPMENT LAYOUT- PHASE 1

SCALE	DRAWING NUMBER	SHEET	REV
1/8"=1' OR NOTED	5520.000-LE-	1 OF 1	

CREATED WITH : Ideas12NXSeries GROUP: ACCELERATOR MECH. SUPPT.

Created: 07:33:58 on 16-06-09 (D-M-Y) By: wesseln State: 1-INITIAL