REV	DESCRIPTION	DRAWN	DATE
		APPROVED	DATE

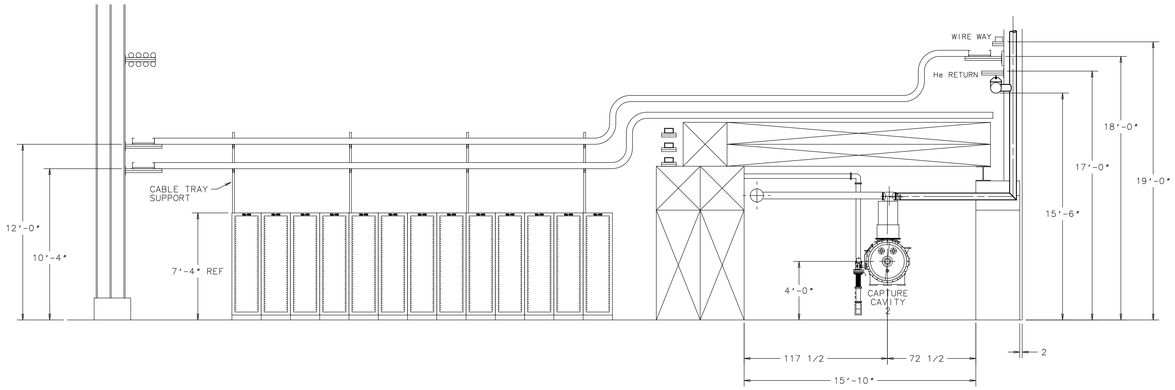

SECTION A-A
SCALE 1/4"=1'-0

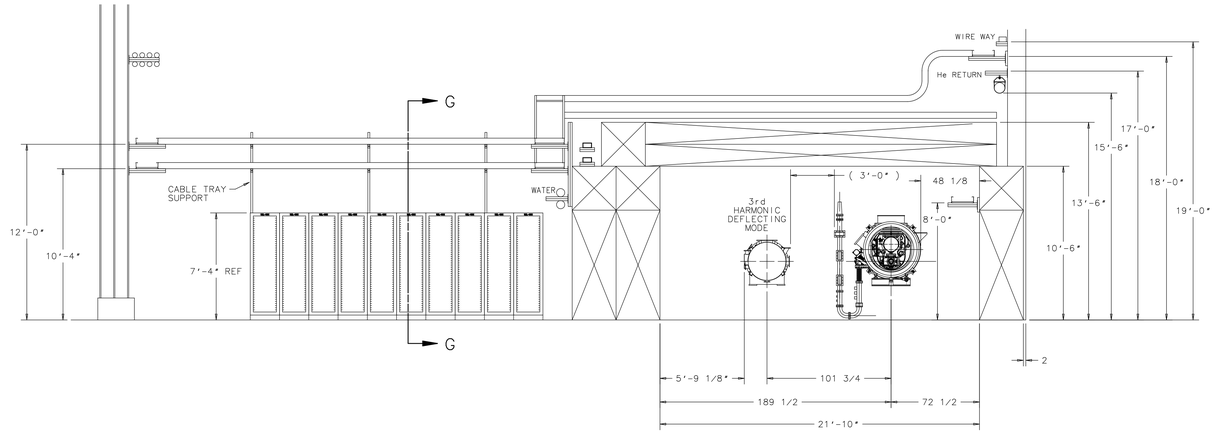

SECTION B-B
SCALE 1/4"=1'-0

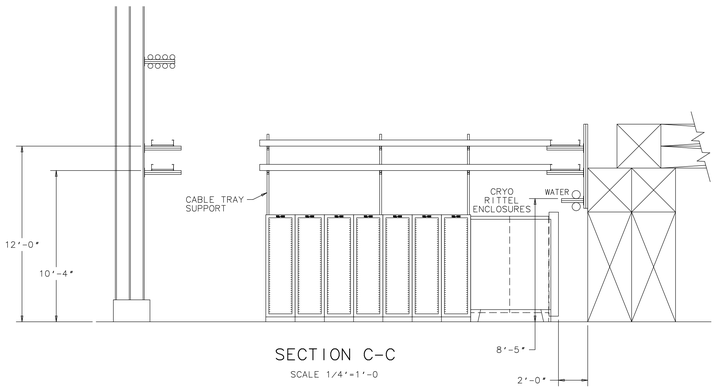

SECTION C-C
SCALE 1/4"=1'-0

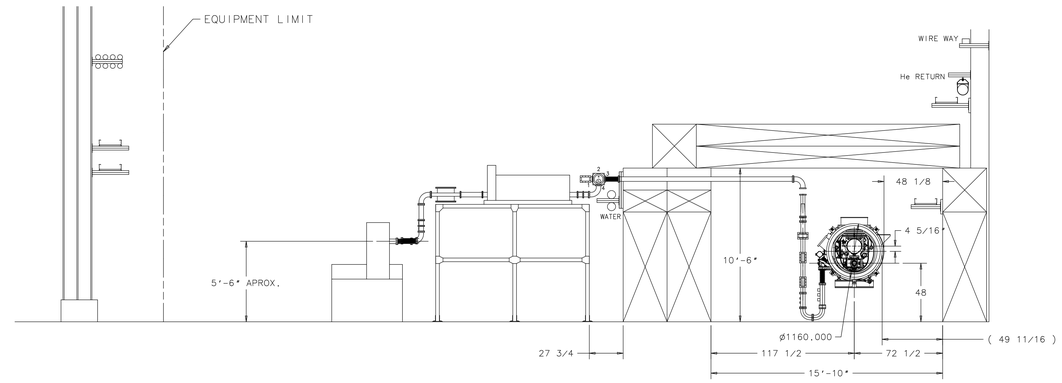

SECTION D-D
SCALE 1/4"=1'-0

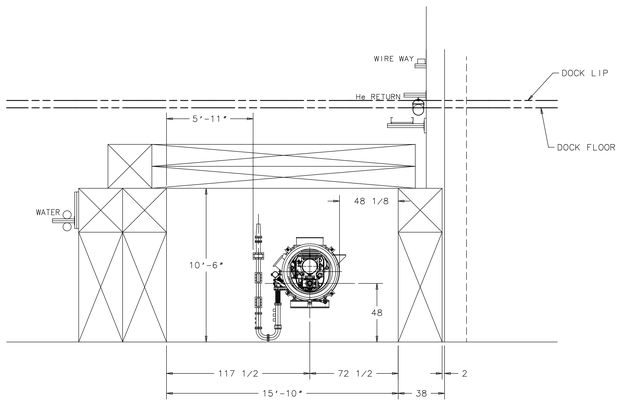

SECTION E-E
SCALE 1/4"=1'-0

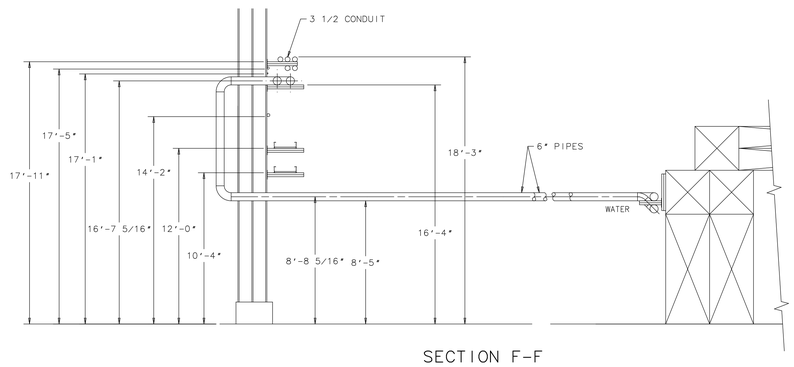

SECTION F-F
SCALE 1/4"=1'-0

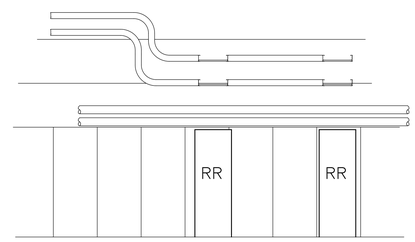

VIEW G-G
SCALE 1/4"=1'-0

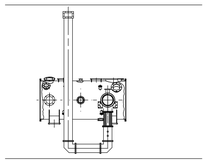

SECTION H-H
SCALE 1/4"=1'-0

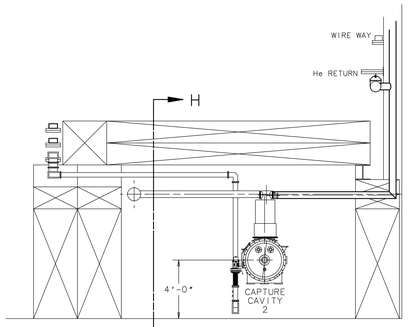

SECTION K-K
SCALE 1/4"=1'-0

AUGUST 6, 2007

UNLESS OTHERWISE SPECIFIED	ORIGINATOR	J.LEIBFRITZ	17-JUL-2007
	DRAWN	S.WESSELN	17-JUL-2007
± ± ±	CHECKED		
1. BREAK ALL SHARP EDGES MAX	APPROVED		
2. DO NOT SCALE DRAWING. 3. DIMENSIONS BASED UPON	USED ON		
4. MAX. ALL MACH. SURFACES	MATERIAL		
5. DRAWING UNITS:			

FERMI NATIONAL ACCELERATOR LABORATORY
UNITED STATES DEPARTMENT OF ENERGY

SMTF - FACILITY LAYOUT
ILCTA-NML
EQUIPMENT LAYOUT- CROSS SECTIONS

SCALE	DRAWING NUMBER	SHEET	REV
1/4"=1' OR NOTED	5520.000-LE-	1 OF 1	
CREATED WITH : Ideas12NXSeries	GROUP: ACCELERATOR MECH. SUPPT.		