REV	DESCRIPTION	DRAWN	DATE
		APPROVED	DATE

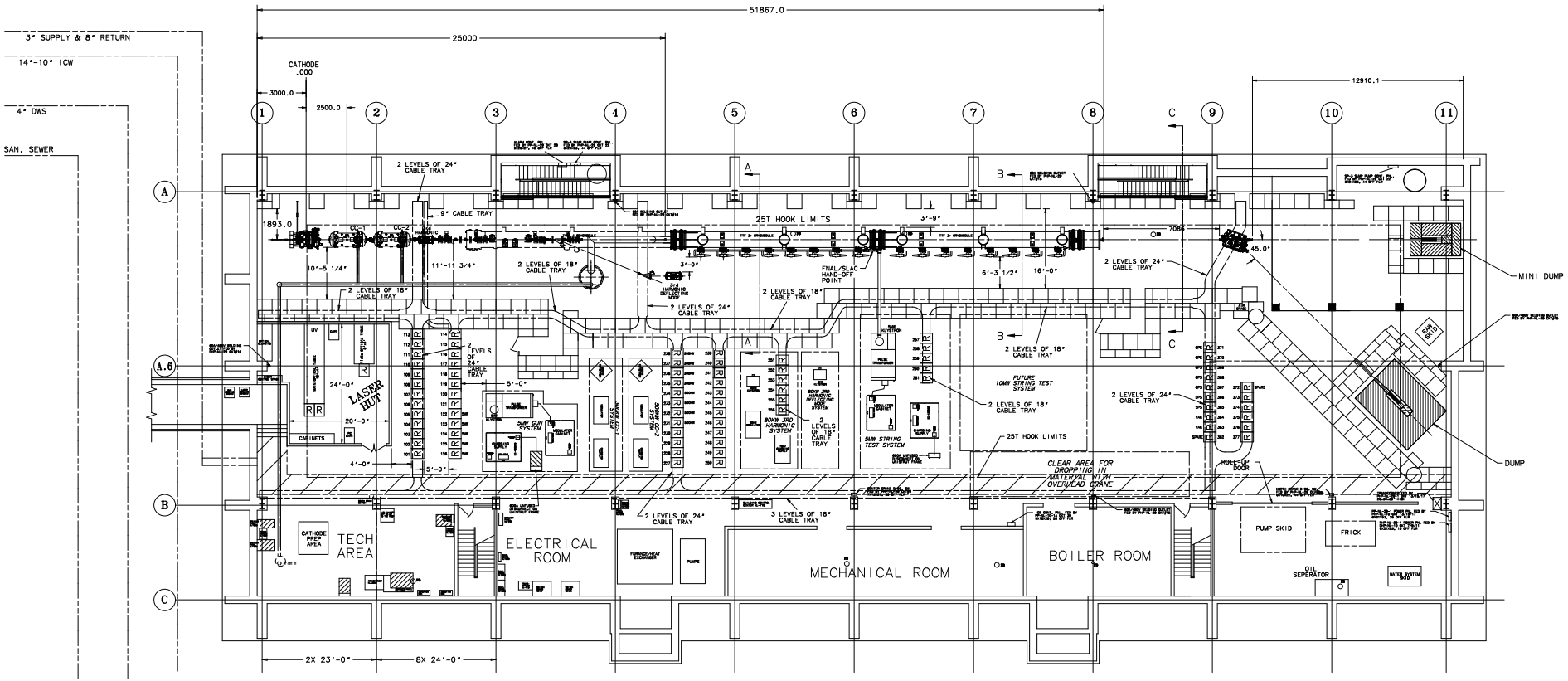

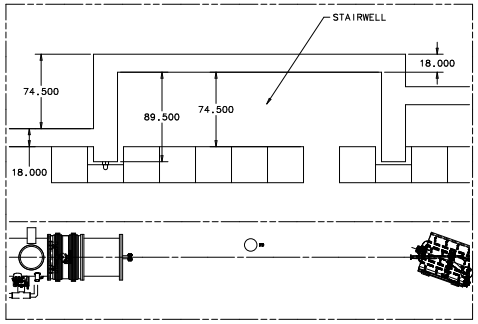

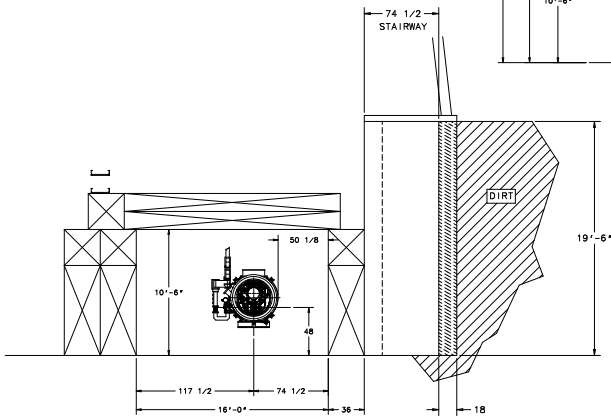

SECTION C-C
SCALE 1/4"=1'-0

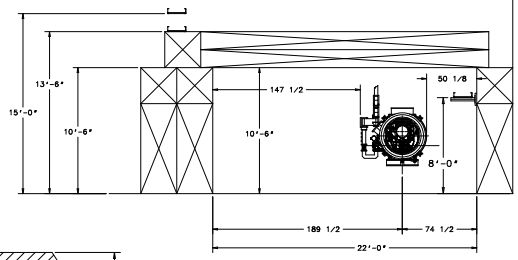

SECTION A-A
SCALE 1/4"=1'-0

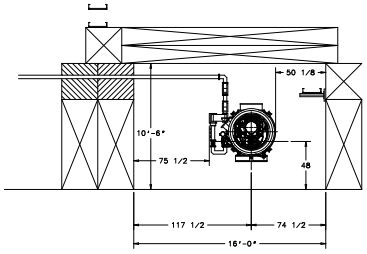

SECTION B-B
SCALE 1/4"=1'-0

JAN 19, 2007

UNLESS OTHERWISE SPECIFIED	ORIGINATOR	J.LEIBFRITZ	19-SEP-2006
± ± ±	DRAWN	S.WESSELN	19-SEP-2006
1. BREAK ALL SHARP EDGES MAX.	CHECKED		
2. DO NOT SCALE DRAWING.	APPROVED		
3. DIMENSIONS PER ASME Y14.5M-1994	USED ON		
4. MAX. ALL MACH. SURFACES 125	MATERIAL		
5. DRAWING UNITS: U.S.INCH			

FERMI NATIONAL ACCELERATOR LABORATORY
UNITED STATES DEPARTMENT OF ENERGY

SMTF - FACILITY LAYOUT
ILCTA-NML
EQUIPMENT LAYOUT

SCALE	DRAWING NUMBER	SHEET	REV
1/8"=1' OR NOTED	5520.000-LE-	1 OF 1	

CREATED WITH : Ideas12NXSeries GROUP: ACCELERATOR MECH. SUPPT.

Created: 09:52:28 on 24-09-06 (D-M-Y) By: wessel n State: 1-INITIAL