ATCA: a new Bus System for High Reliability

Kay Rehlich
DESY

- The future of bus systems
- ATCA features
- Conclusions

Motivation

- **How to improve the reliability of XFEL and ILC ?**
- **A new accelerator, that will start operation in 7 or more years, should be designed with a technology that is not outdated at commissioning time**

Actual Bus Standards

- PCI / cPCI
  - ≥ 133 MB/s @32bit, max 500MB/s
  - Max 8 slots
- VME
  - ≤ 320 MB/s (64bit, 2eSST)
  - Max 21 slots
- For comparison: Gigabit Ethernet: ~ 100MB/s

- **Parallel busses**
  - Are at the speed limit due to RF properties of bus layouts
  - Single module can corrupt the whole system

→ **Gigabit serial links are going to replace parallel busses**

PCI --> PCIexpress

- Standard PCs will migrate from PCI to PCIe

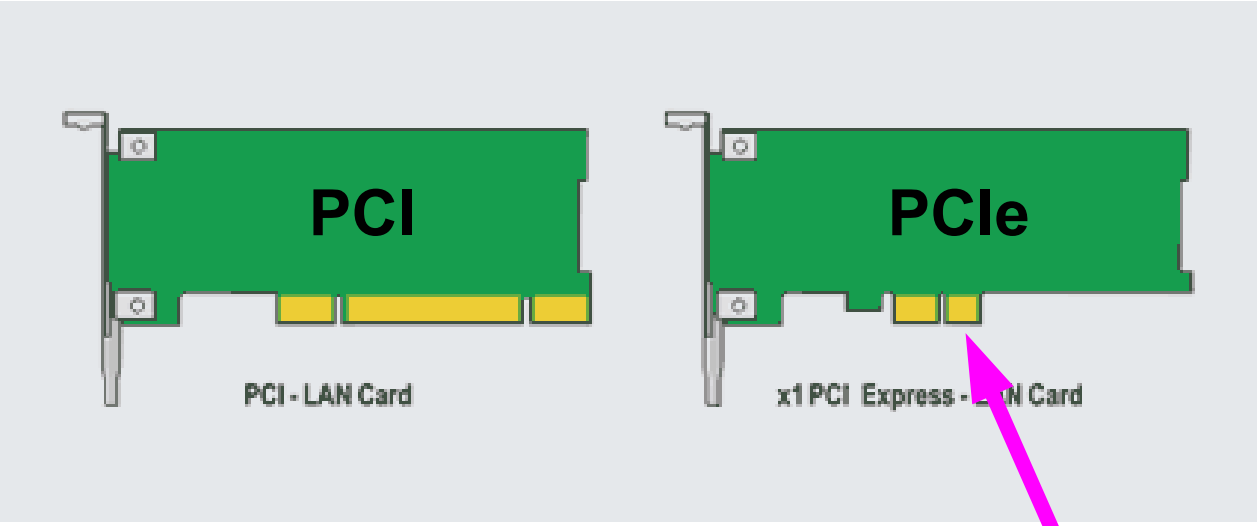

Gigabit serial bus

133MB/s --> 500MB/s .. 8GB/s

Gigabit Links

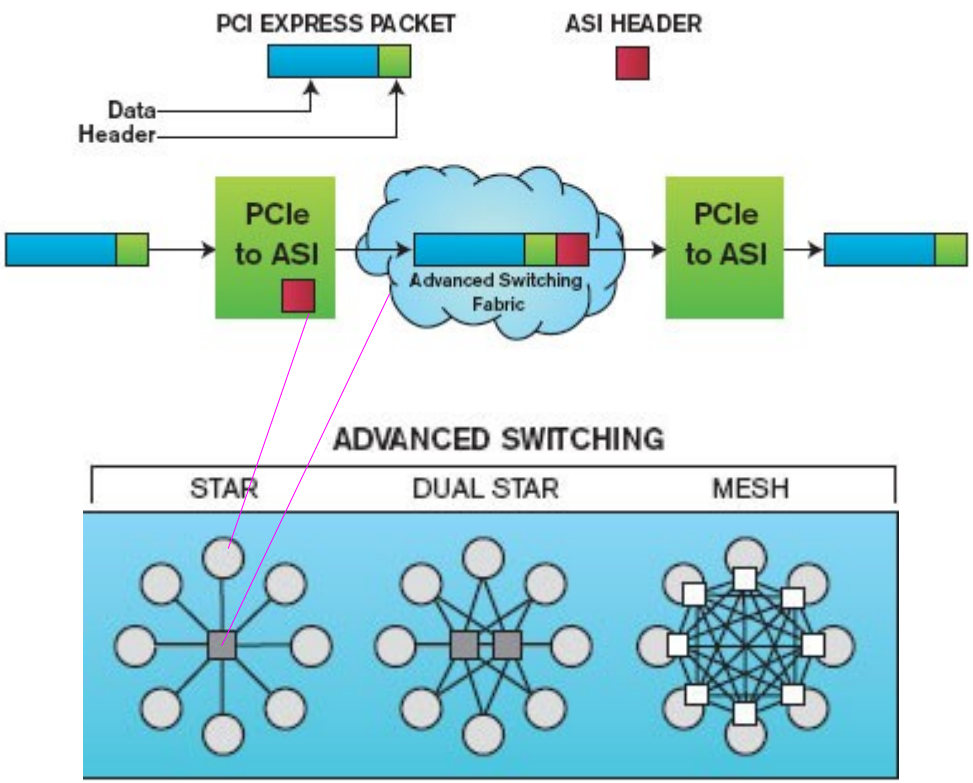

- Point-to-point link
  - LVDS pysical layer
    low voltage, differential
  - Seperate transmit and receive lines
- Connected by Fabric
  - Packet data transfer
- Different protocols
- Star or mesh topologies
- Redundancy possible

Parallel Links

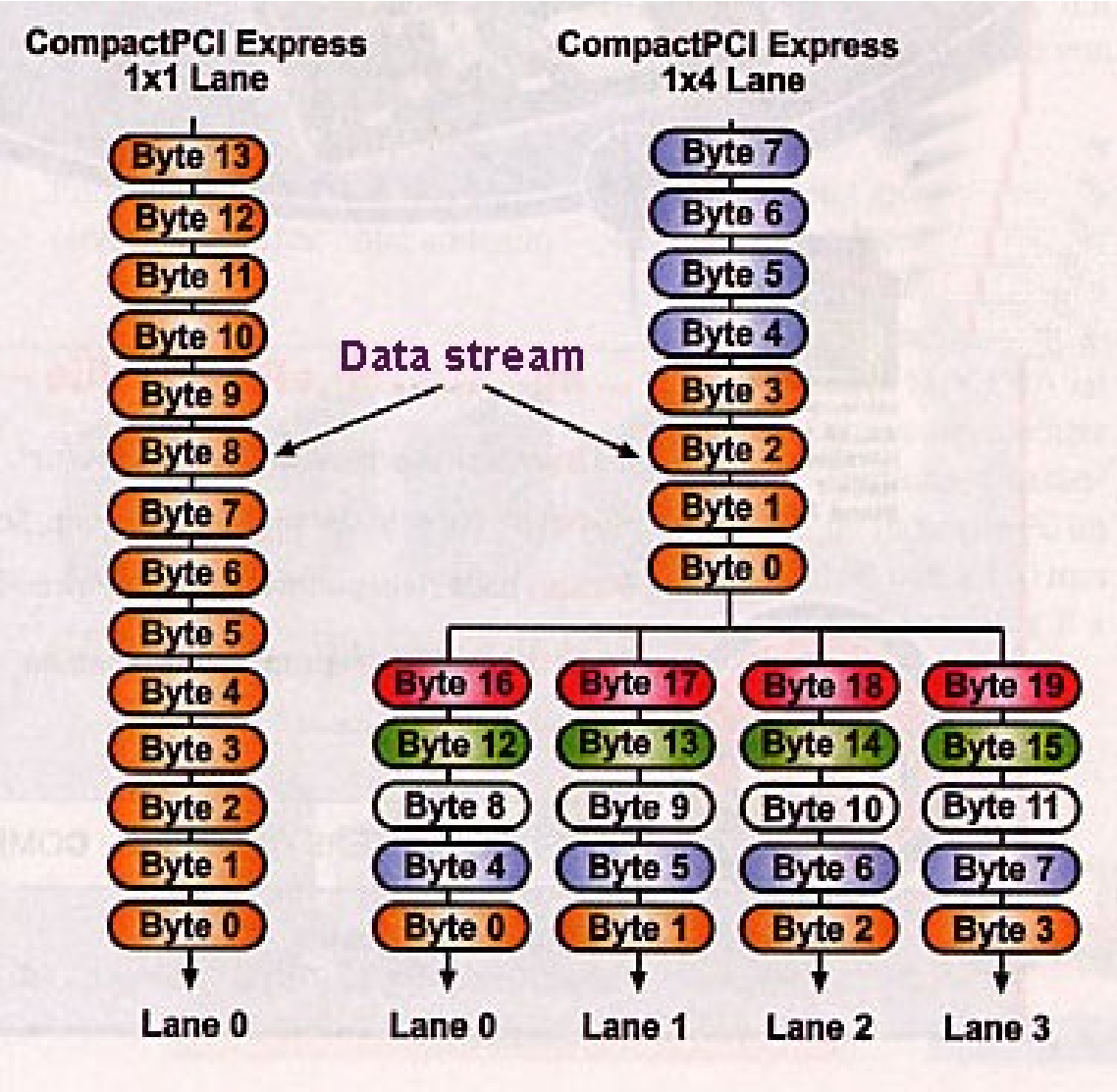

- Data streams
  - single
  - Parallel on N lanes

ATCA

- Advanced Telecom Computer Architecture AdvancedTCA

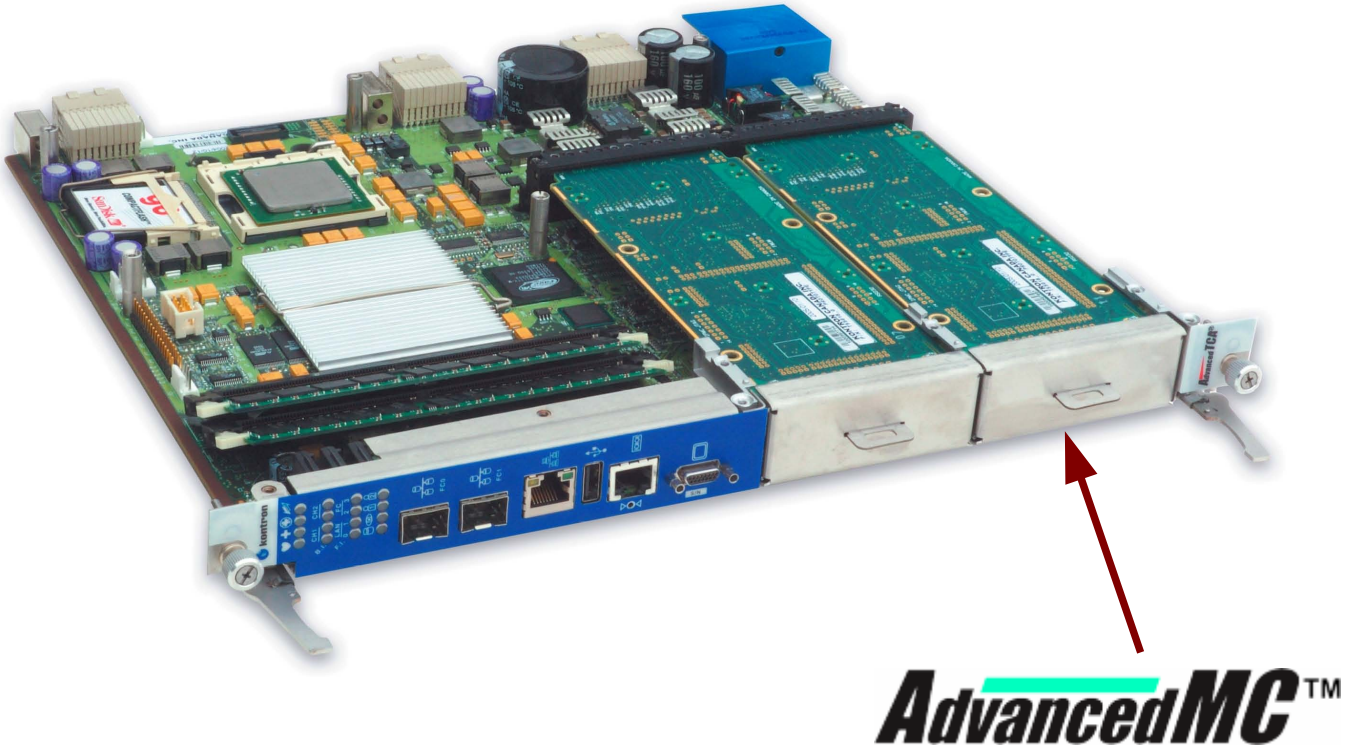

ATCA Board

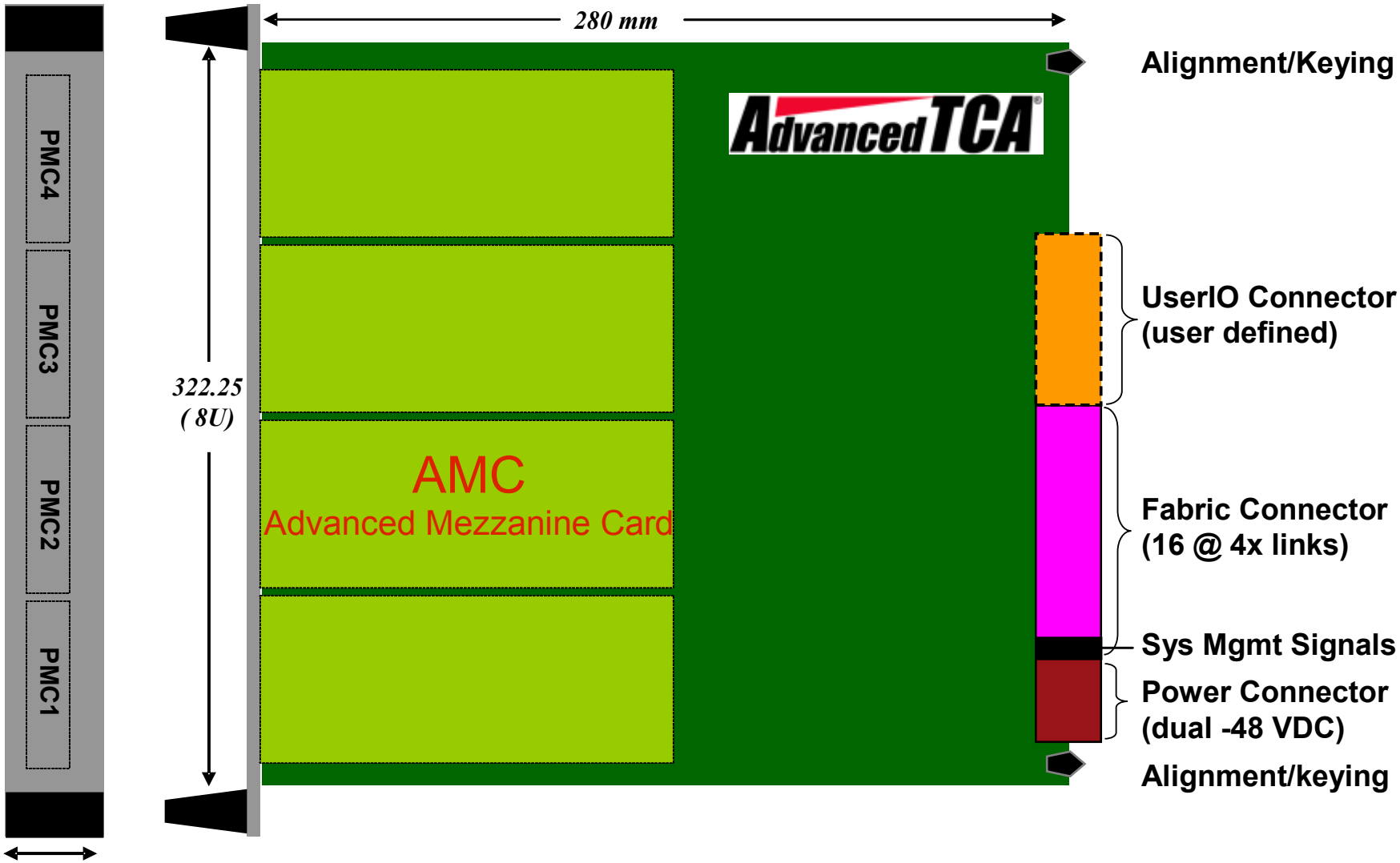
280 mm
322.25
(8U)
PMC4
PMC3
PMC2
PMC1
AMC
Advanced Mezzanine Card
AdvancedTCA
Alignment/Keying
UserIO Connector
(user defined)
Fabric Connector
(16 @ 4x links)
Sys Mgmt Signals
Power Connector
(dual -48 VDC)
Alignment/keying

ATCA Power Connection

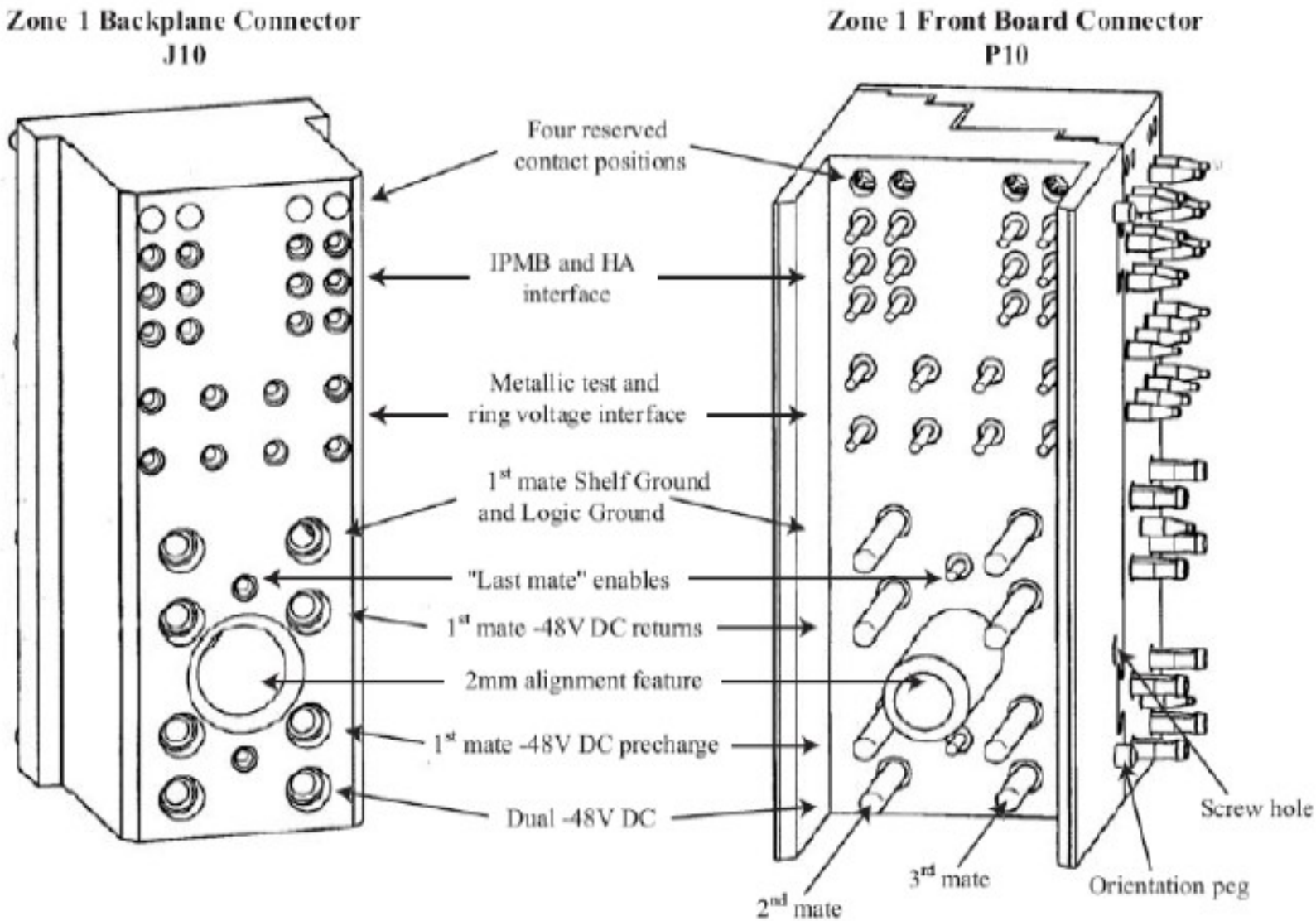

Hot-swap-capable

Cooling

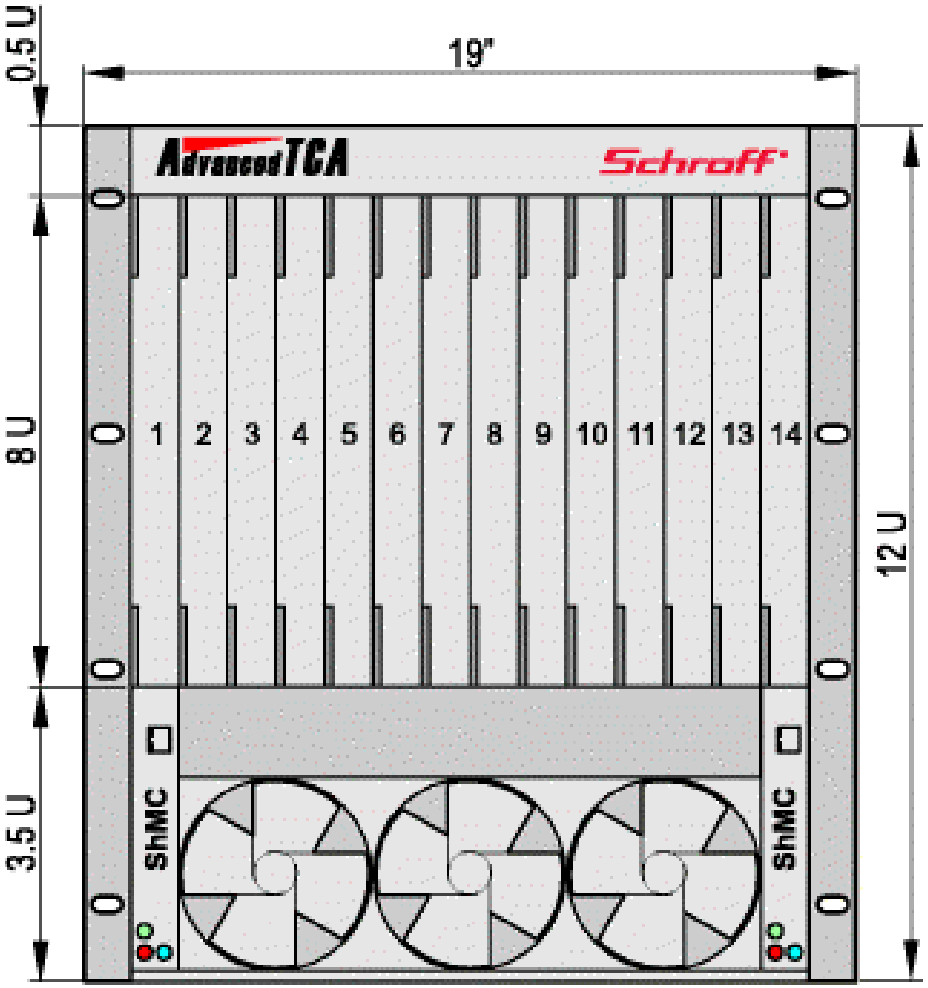
0.5 U
19"
AdvancedTCA
Schroff
8 U
1 2 3 4 5 6 7 8 9 10 11 12 13 14
12 U
3.5 U
ShMC
ShMC

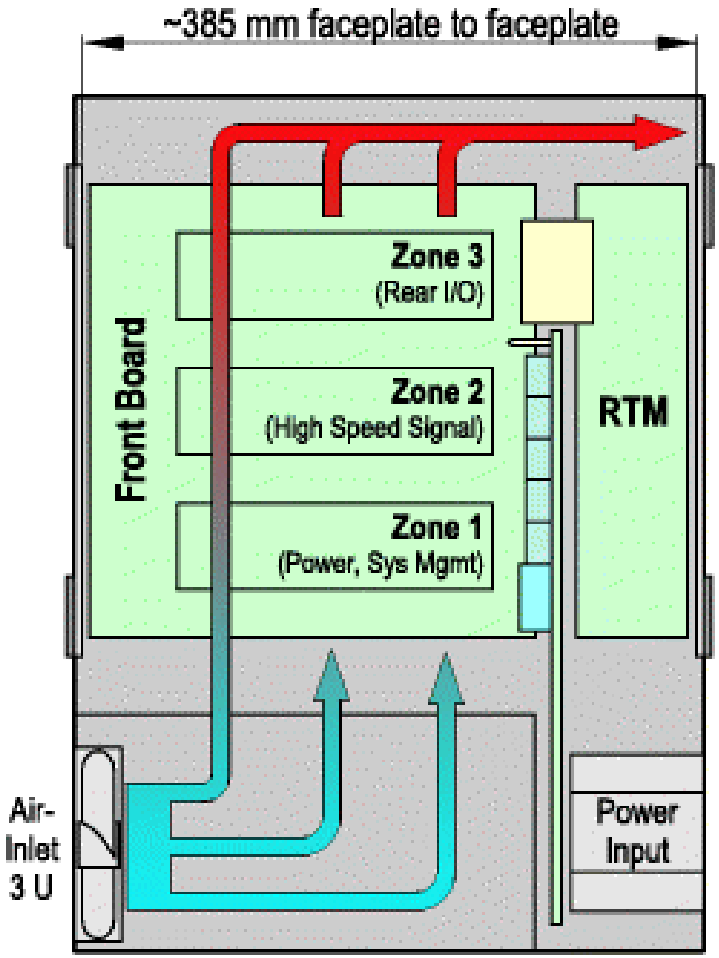
~385 mm faceplate to faceplate
Front Board
Zone 3
(Rear I/O)
Zone 2
(High Speed Signal)
Zone 1
(Power, Sys Mgmt)
RTM
Air-
Inlet
3 U
Power
Input

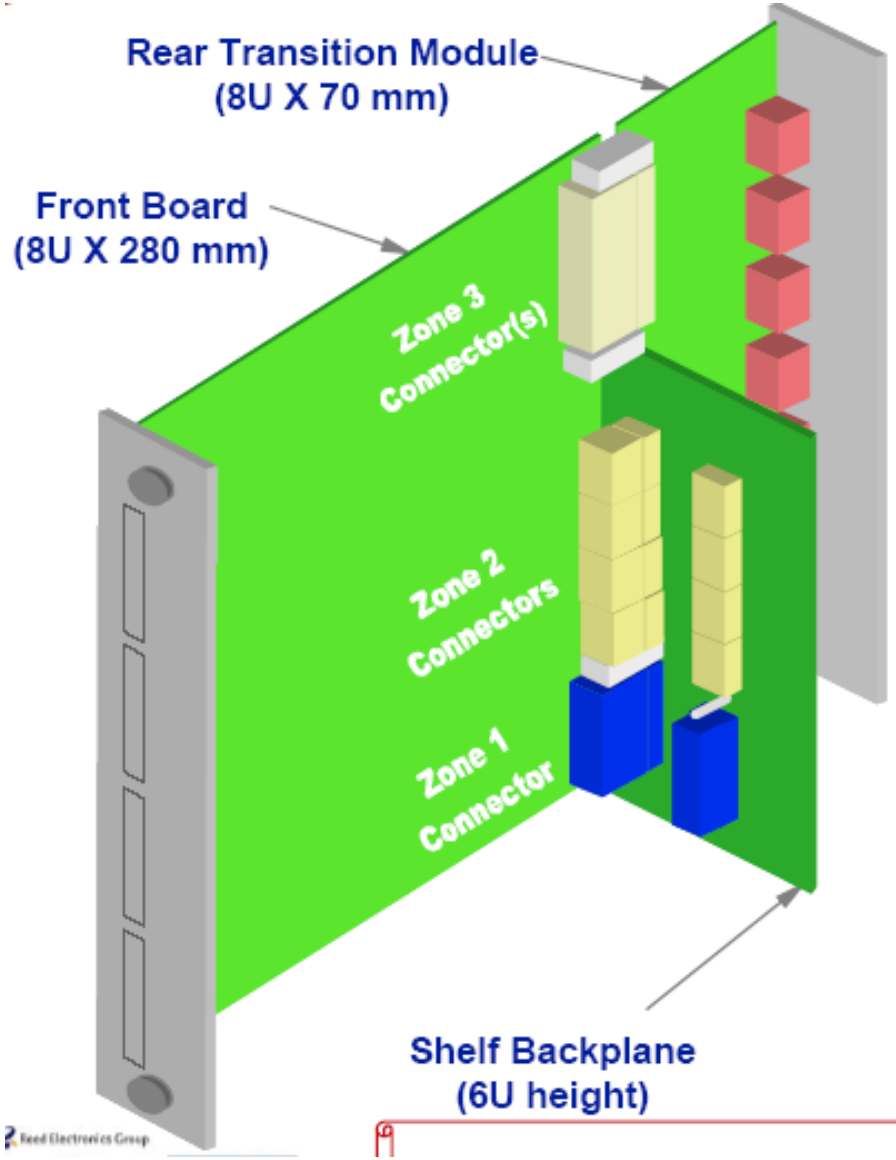

AdvancedTCA®

Zone 2 Backplane Interfaces:

Base Interface
- 10/100/1000 BASE-T Ethernet
- Dual Star fabric topology

Fabric Interface
- SERDES (3.125 Gbps min)
- 1x, 2x, or 4x Channels
- Star or Mesh fabric topology
- Interoperability defined by subsidiary specifications

Synchronization Interface
- Three dedicated clock interfaces (8kHz, 19.44 MHz, user defined)
- Redundant buses
- MLVDS signaling

Update Channel
- Point to point connection between two slots

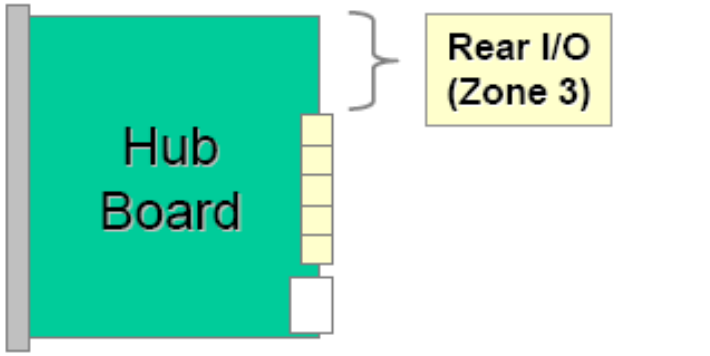

Hub Board
- Supplies switching connective Boards in the shelf
- Installed in designated Hub slots

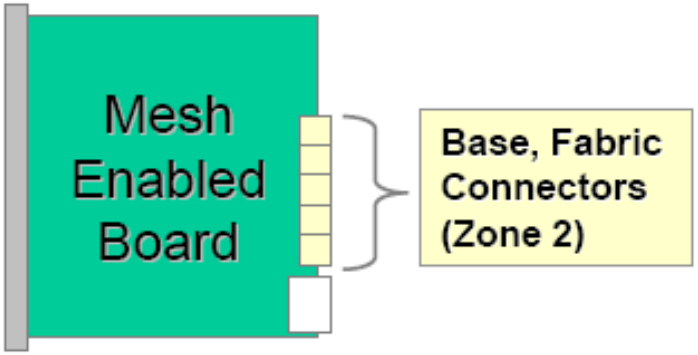

Mesh Enabled Board
- Direct connection to all Boards in the shelf
- Installed into any slot

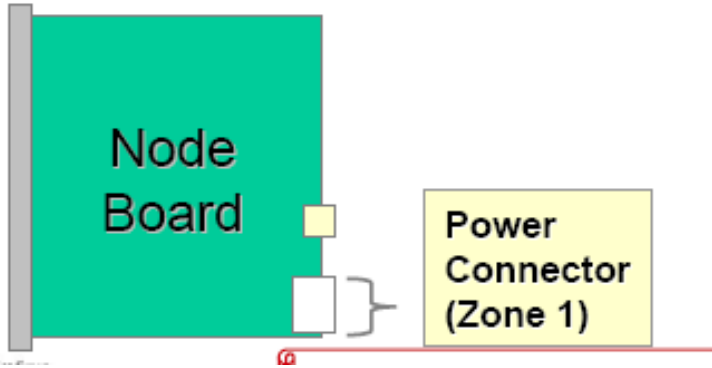

Node Board
- Single, Dual, Many Star connections possible
- Installed into any Node slot

ATCA Specs.

- Star and mesh backplane for LVDS fabrics
- Protocols:
  - InfiniBand
  - **Gigabit Ethernet**
  - Star Fabric and RapidIO
  - PCI Express
- multiple 2.5..10 Gigabit bi-directional links between the slots
- Cooling: up to 150 (200)W / board
- System management
  - Detects and handles faults of hardware and software
  - Service Availability Forum (SAF) → industrial standard
- Specs defined by:
  - PCI Industrial Manufactures Group – PICMG Standards
  - www.picmg.org

ATCA Management

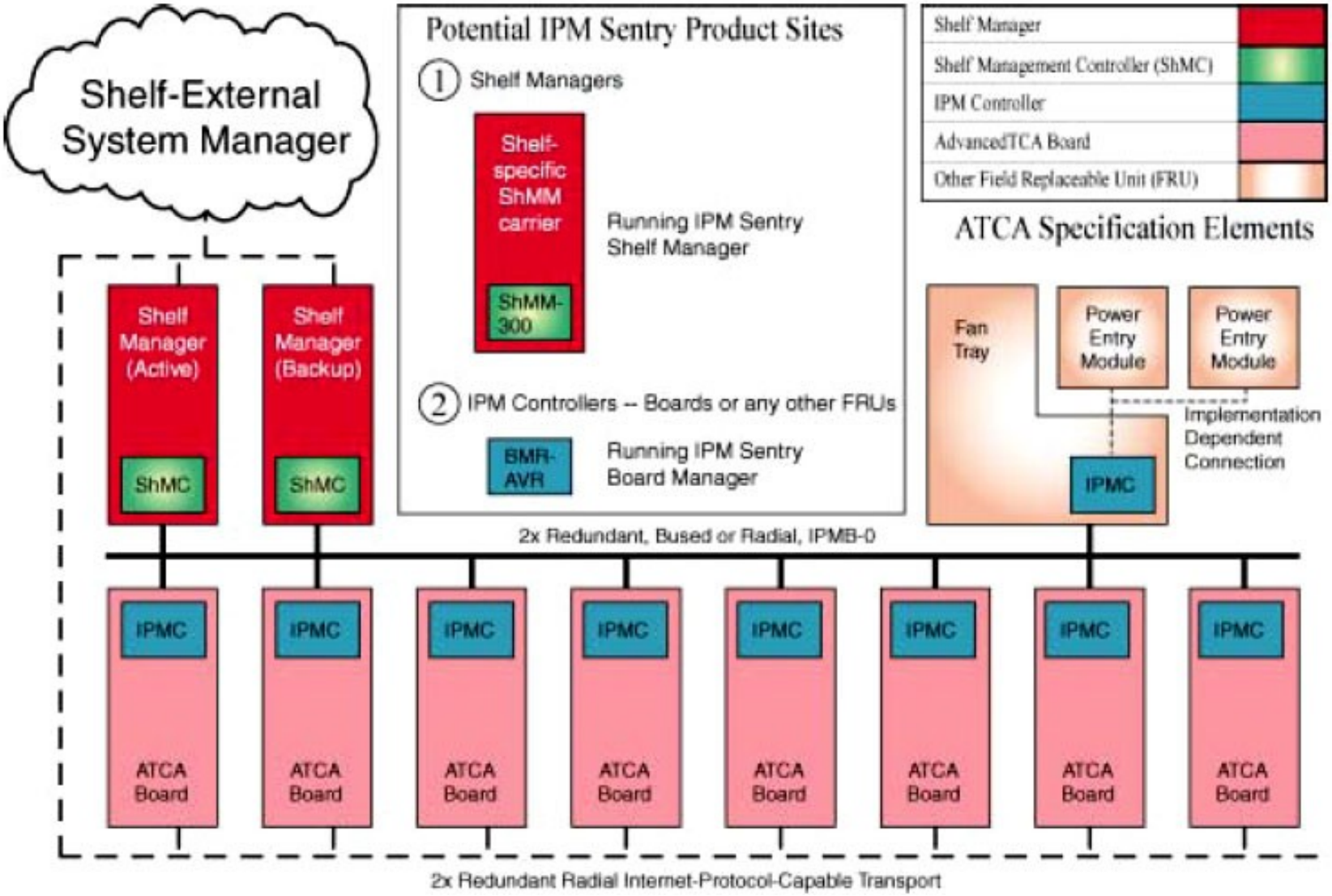

IPM: Intelligent Platform Management

µTCA Prototype

AdvancedMC™

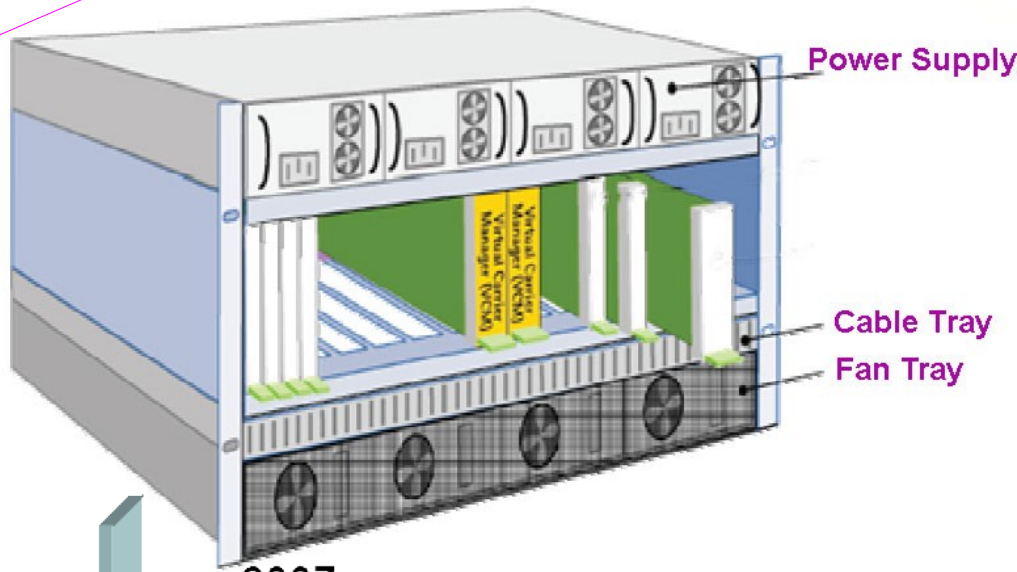

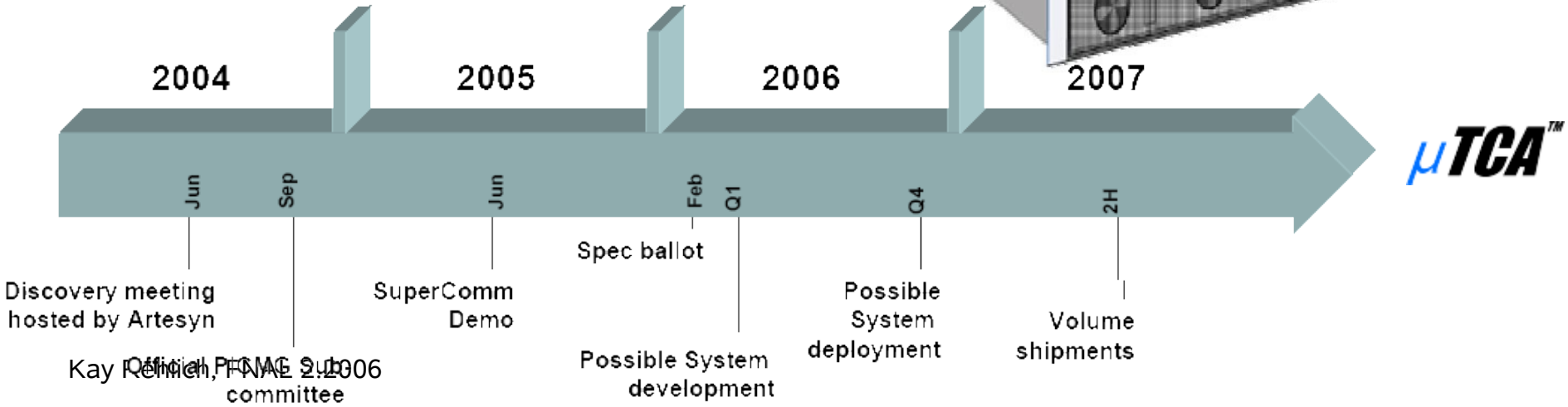

VME with Gigabit Links (VXS)

- 2x PowerPC 7447 CPU node
- 2x Xilinx Virtex-II Pro FPGA
- 8X 2.0-3.125 Gbit/sec

VMETRO

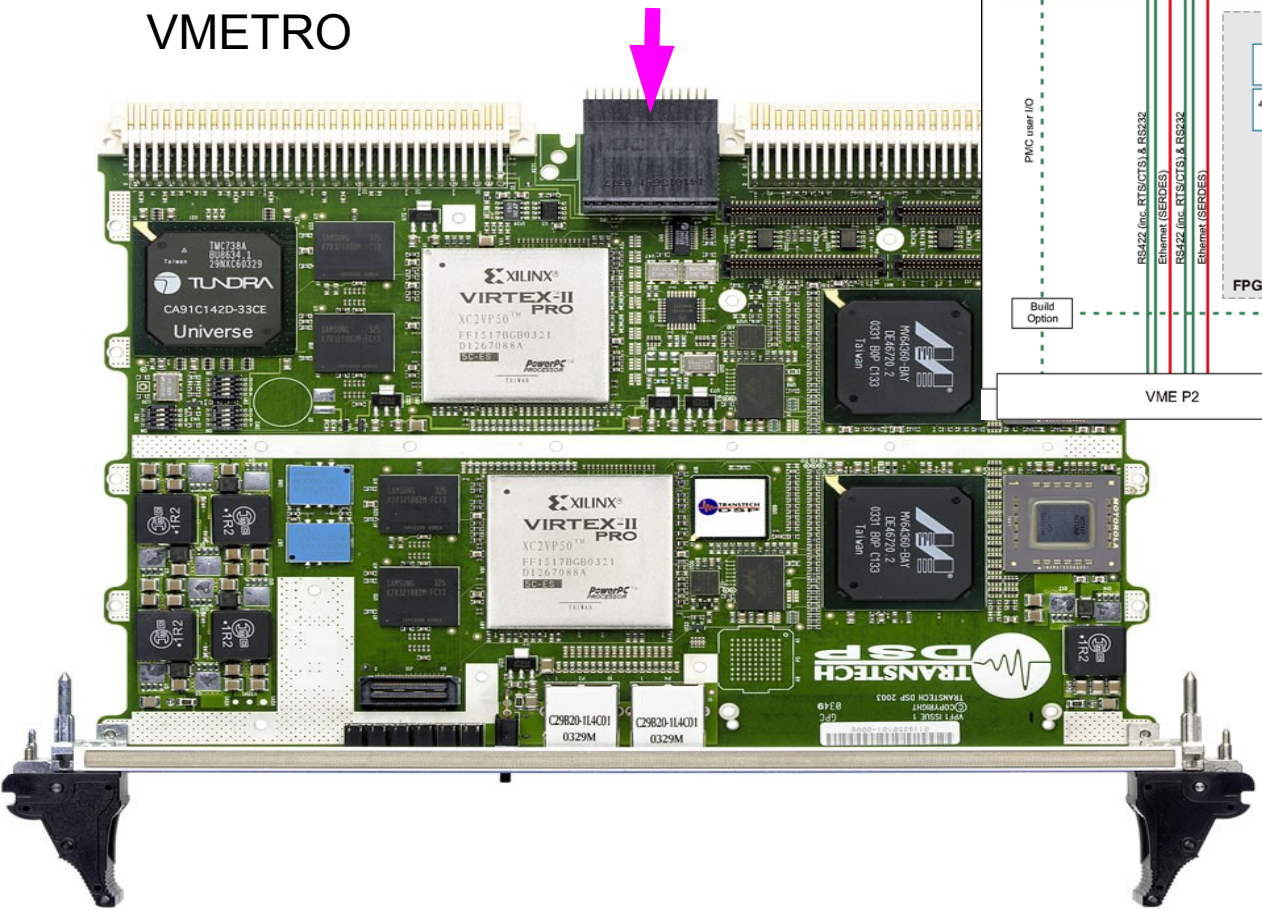

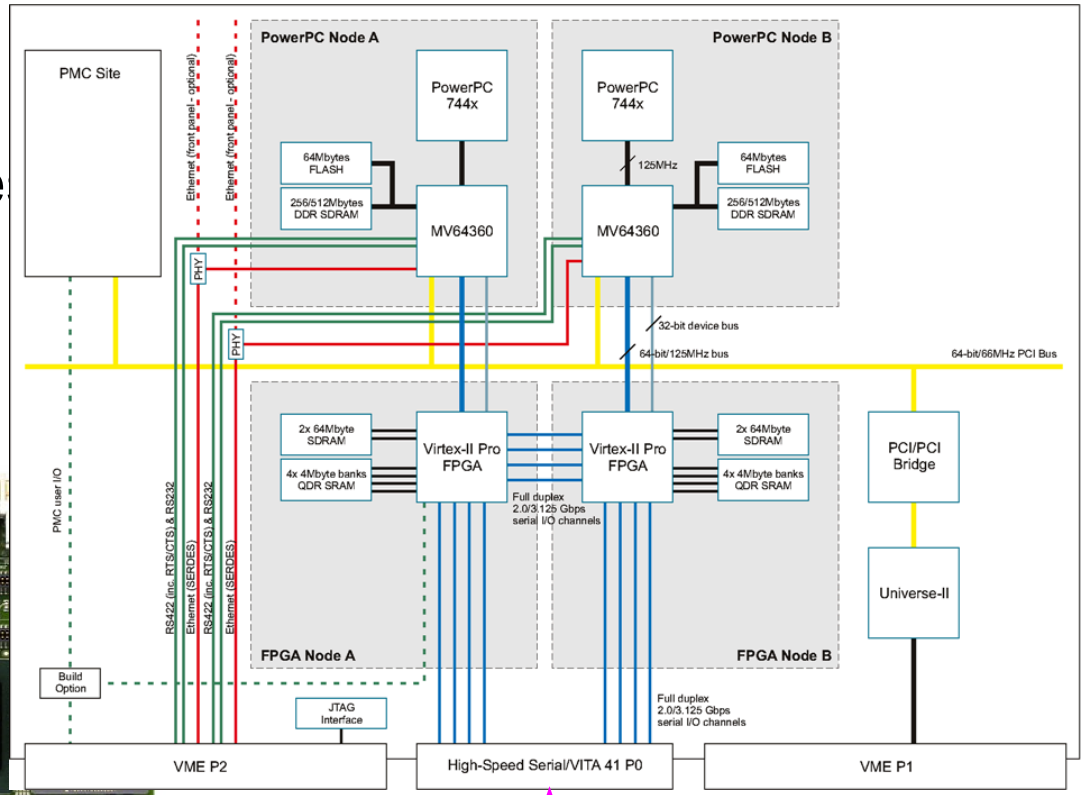

Gigabit links:
direct connection to
FPGA

VME with VXS

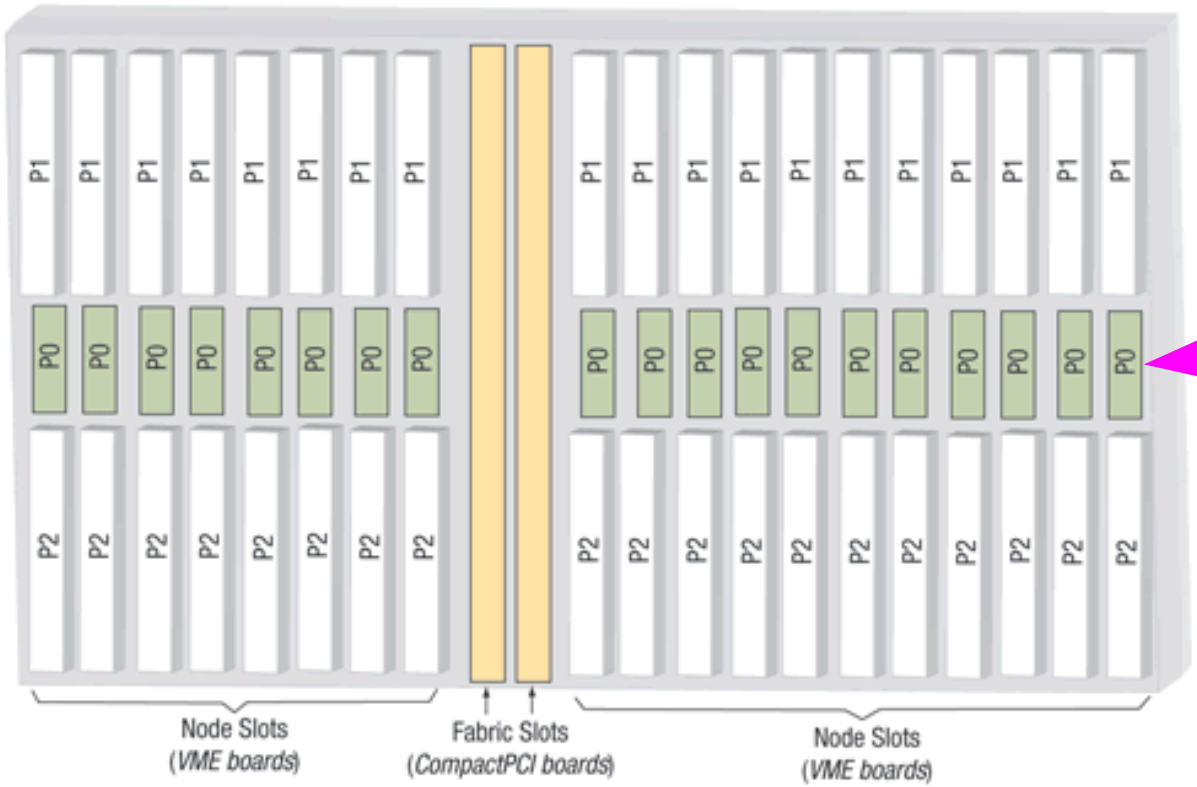

Gigabit serial bus

Example of a 21-slot VITA 31.1 backplane with, in this case, two fabric (Ethernet switch) slots and 19 node slots (for VME boards).

Mean Time Between Failures

- Some examples (rough numbers)
  - PC motherboard 50 kh
  - VME CPU 180 kh
  - Fan 60 kh
  - Power supply 50 kh .. 400 kh
  - SCSI disk 1 000 kh
  - IDE 300 kh

Conclusions

- Parallel busses will be replaced by Gigabit serial communications
- ATCA + µTCA:
  - Huge market
  - Has excellent reliability features
  - Less noise from parallel bus vs. switched power supply on boards
  - No IO modules (ADC, digital..) available yet
  - µTCA will be a cheap alternative/add to ATCA
- VME + VXS is compatible to legacy hardware
- ATCA has more board space, shielding possible