XFEL Control System

Architecture and program

Kay Rehlich
DESY
8. 2. 2006

XFEL Control System

- **Will be based on the TTF control system DOOCS (Distributed Object Oriented Control System), new features will be added**

- **It is planed to use TTF as a test-bed and to smoothly upgrade TTF (keep XFEL / TTF compatible)**

- **Object oriented approach:**
  device abstraction on 'device tier'
  subsystem abstraction on 'service tier'

TTF Control System Blocks

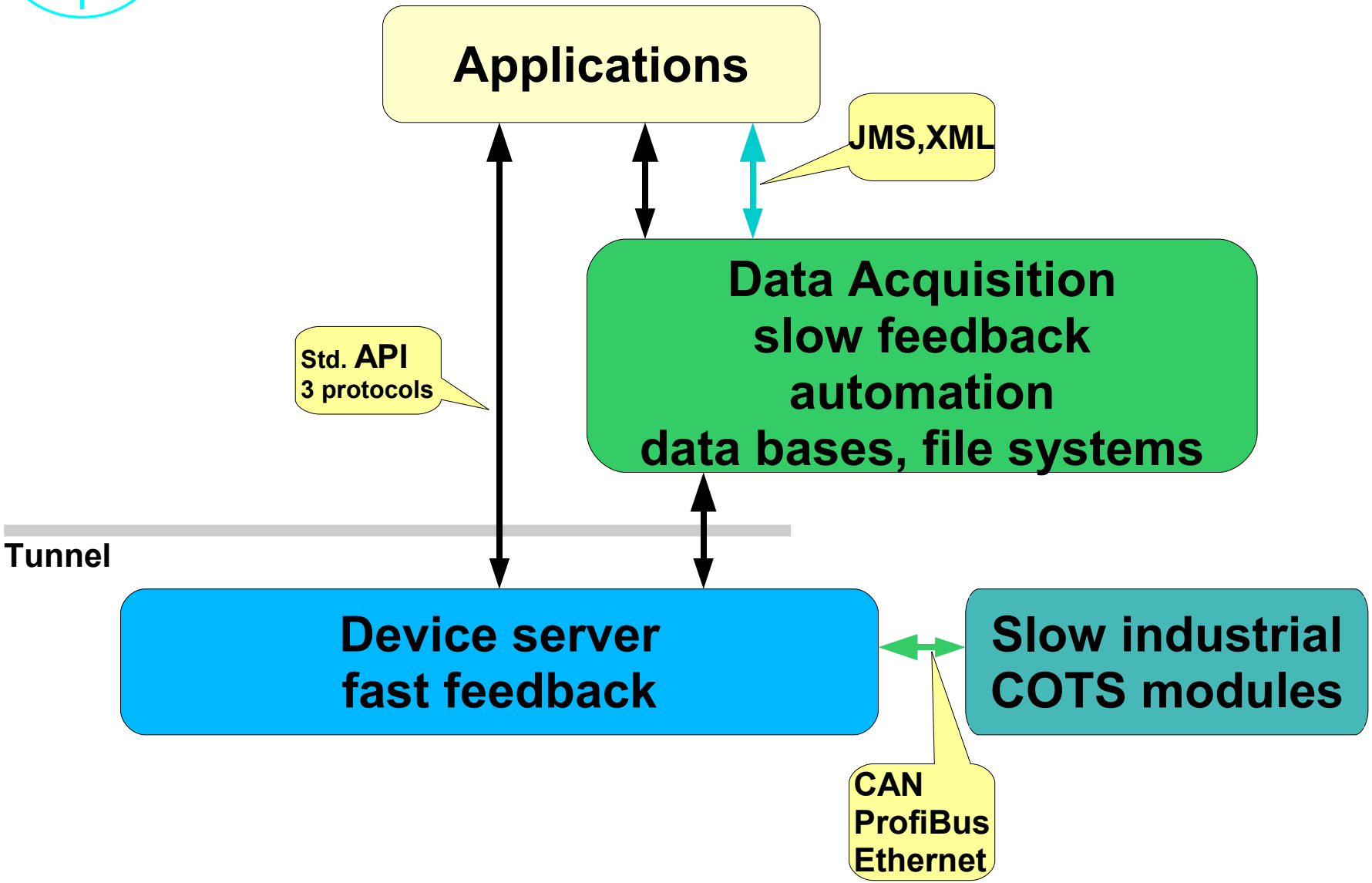

XFEL Control System Blocks

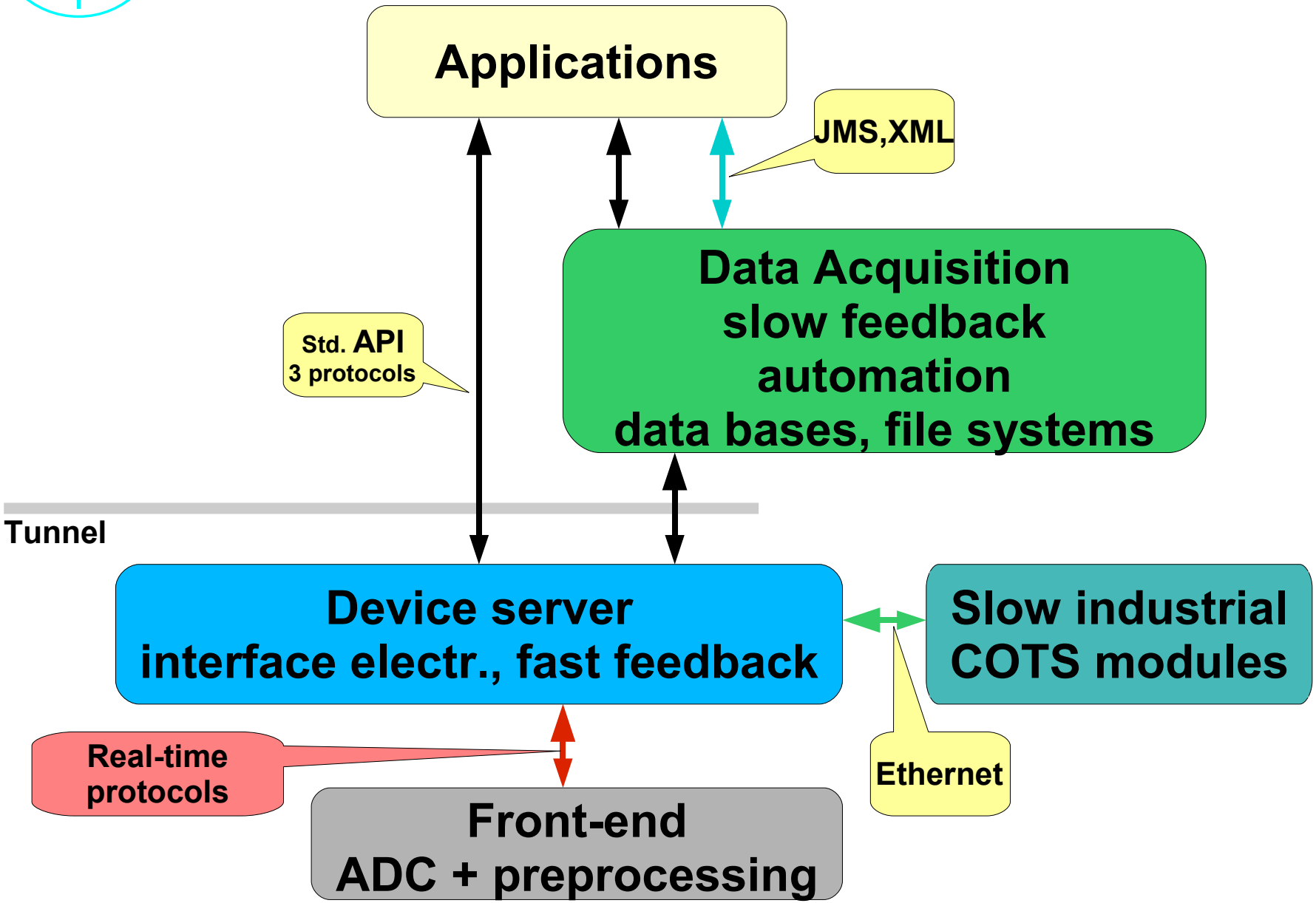

Geographical Layout

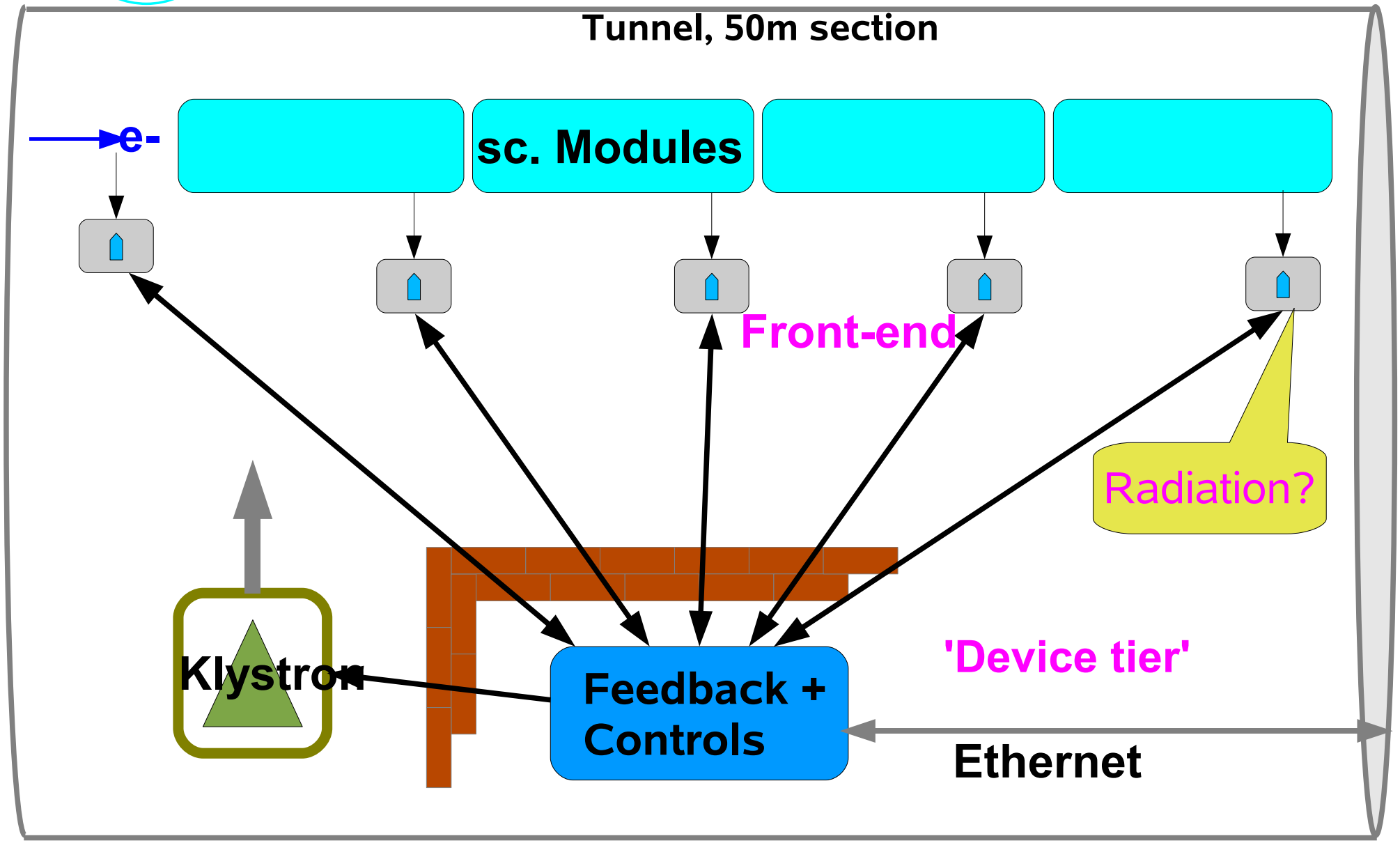

RF and Diag Building Blocks

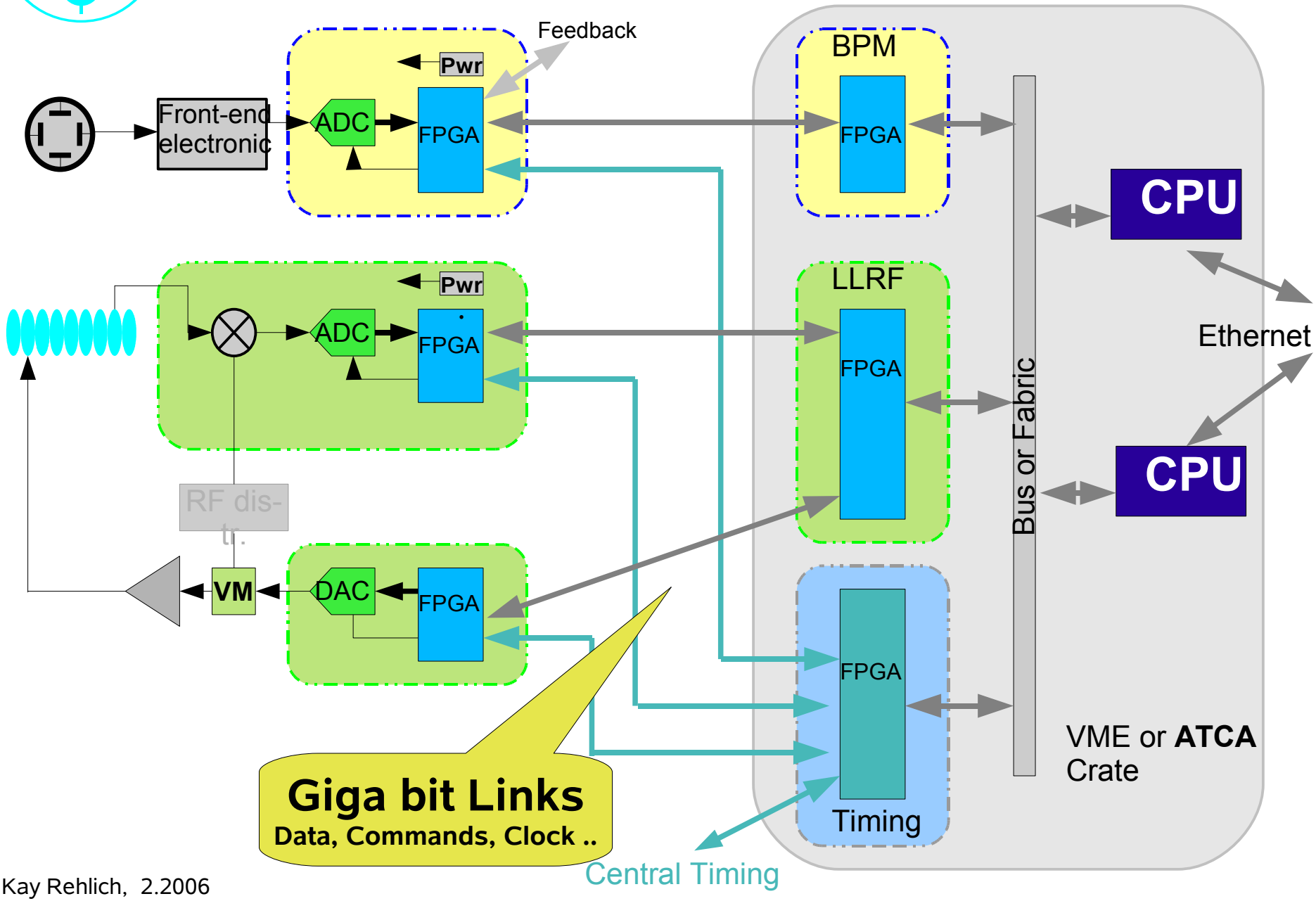

DAQ System

Collects data from ALL bunches for:
slow feedbacks, correlations,
off-line analysis (e.g. trips), experiments ...

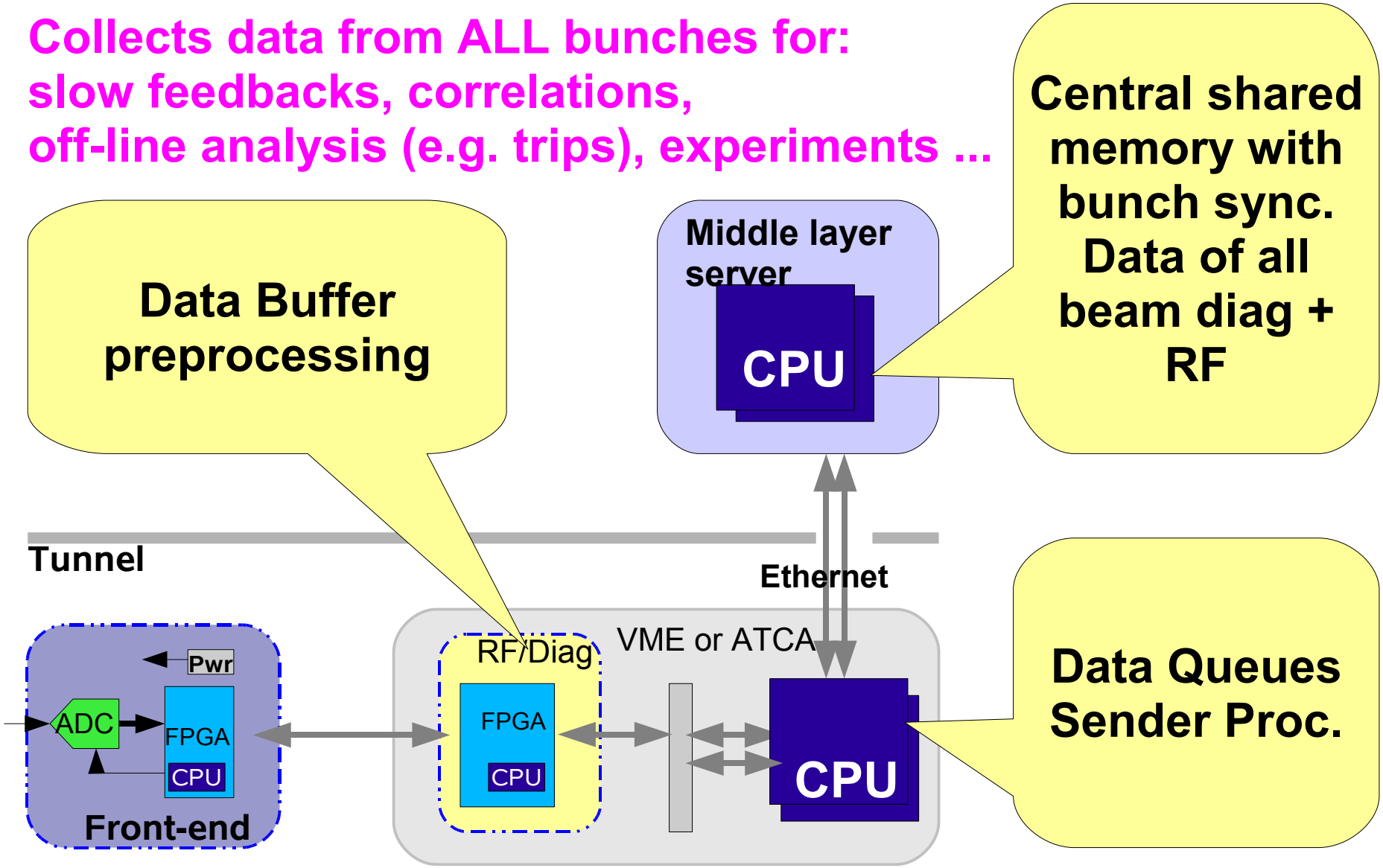

DAQ

Linac data rates (rough estimate):

	XFEL	ILC	TTF
BPMs	500	2000	71
Toroids, BLM	300	1000	80
*bunches * rep rate	12000	16000	72000
LLRF	900	20000	120
"* samples * rep rate	10000	10000	20000
Tot max data rate [MB/s]	114	1770	57
DIAG	46	244	39
RF	69	1526	18

- **Tested rate @ TTF: >30MB/s** (CPU: 16 Proc SPARC)
- **Moore's law:**

	2005	2007	2009	2011	2015
[MB/s]	50	100	200	400	1600

DAQ @ TTF

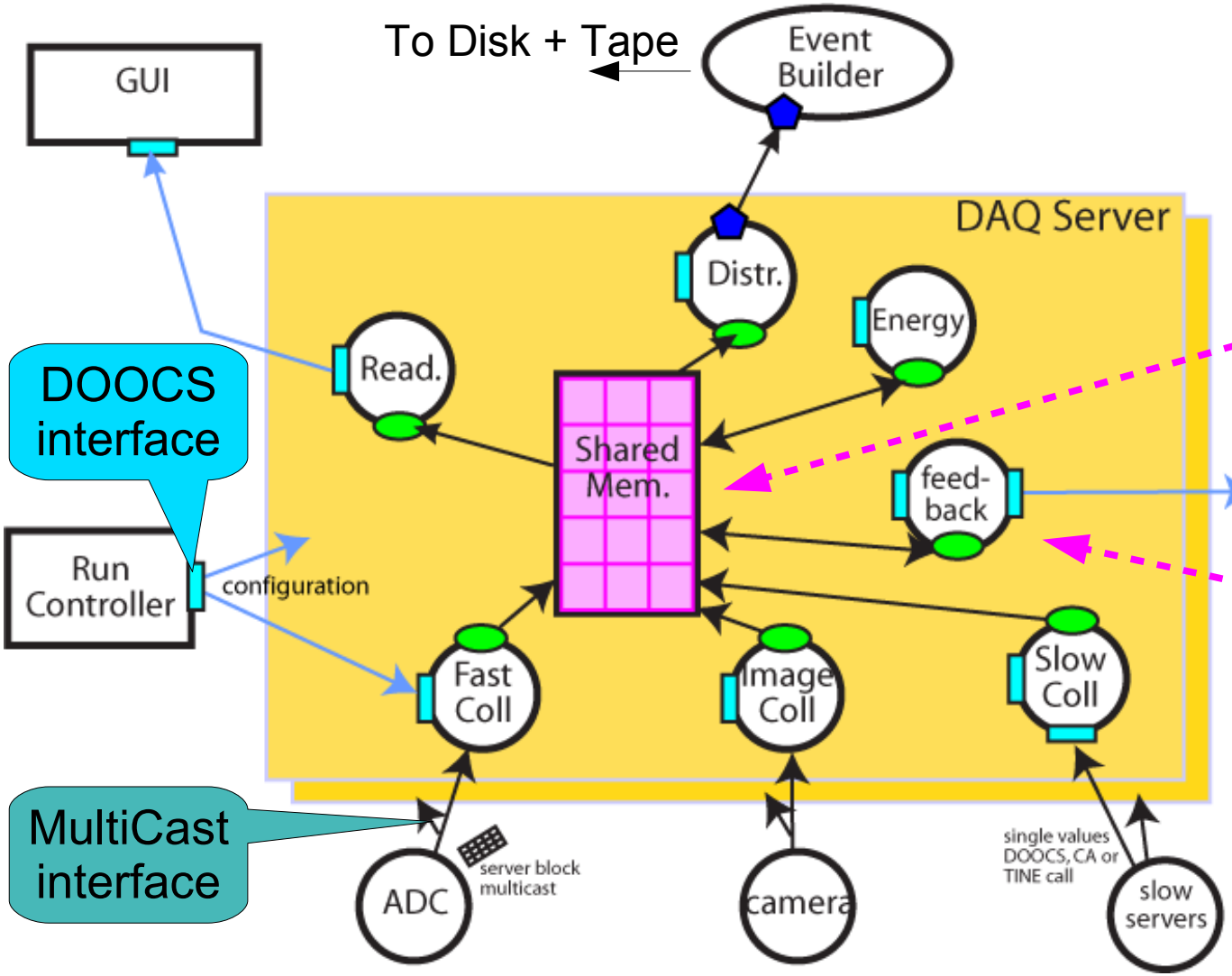

Buffer Manager: stores all bunch-es of several macro pulses

To actors

Feedback and other processes with high data rates (e.g. MATLAB feedback)

Program (1)

- Timing
  - 1.3 or 2.6 GHz clock, phase locked to RF
  - ~10ps RMS jitter
  - Star topology with return path
  - Events (fiducials), event numbers
  - Programmable timings (ns resolution) and interrupts

Program (2)

- **ATCA evaluation**
  - **Real-time protocols for: timing, data transfer, controls (low latency, low jitter)**
  - **Shelf management, self-healing, auto fail-over**
  - **Single event upsets: Front-end reboot / recover**

Program (3)

- **Automation**
  - **Implemented in 'device tier' and 'service tier'**
  - **Feedbacks**
    (prototype ready @ TTF: MATLAB feedback with DAQ)
  - **State Machines (improvements)**
  - **Procedures (common interface)**