Charm the Forgotten Quark

Harry W.K. Cheung - Fermilab

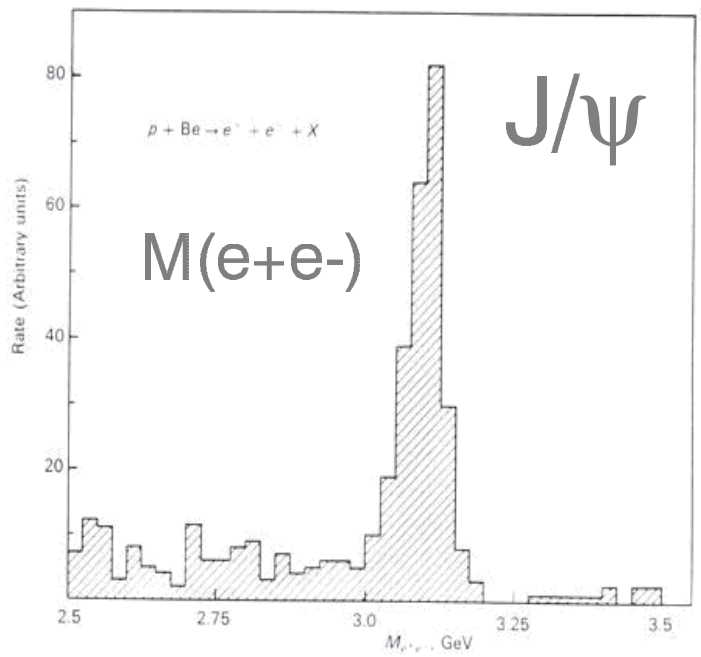

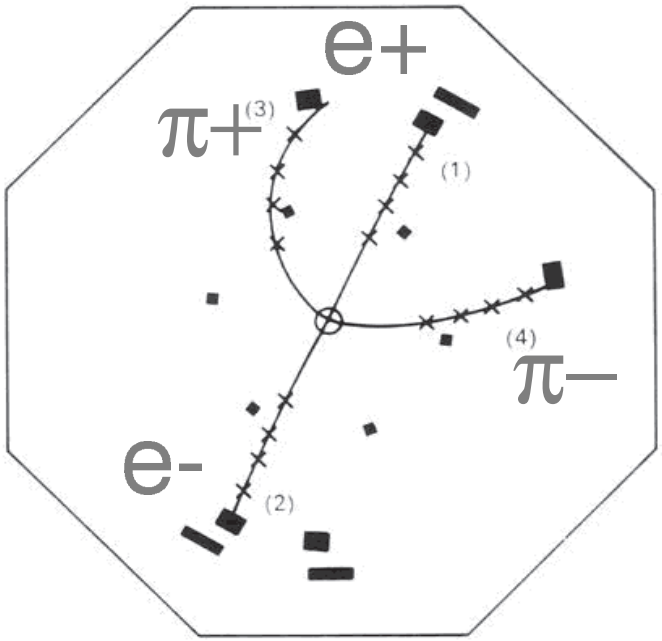

E831 FOCUS on Charm

Harry Cheung - Fermilab

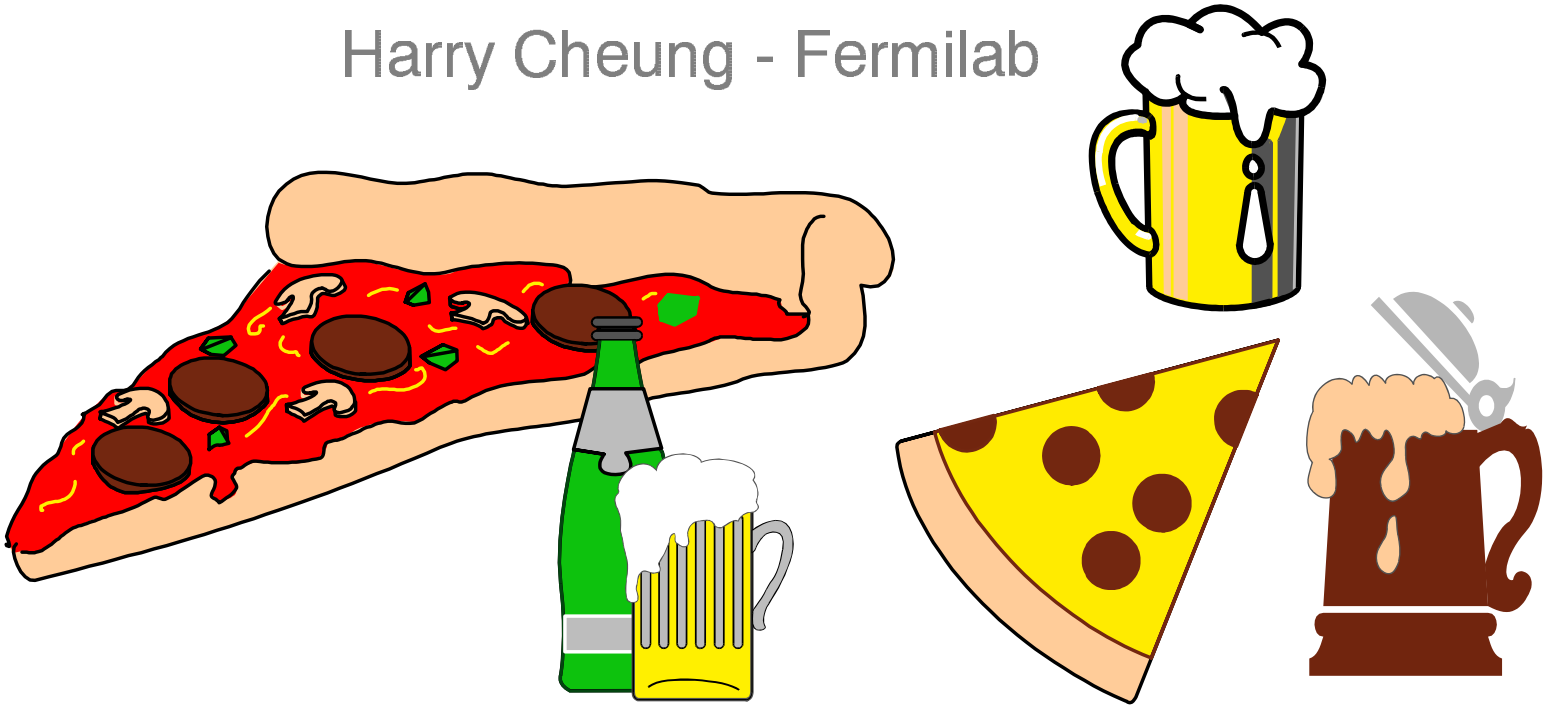

Food for Thought - May 11th 1999

Exciting Times in HEP

- Discovery of charm
- Discovery of tau
- Emerging Quark Model
- Discovery of open charm
- Still many unknowns

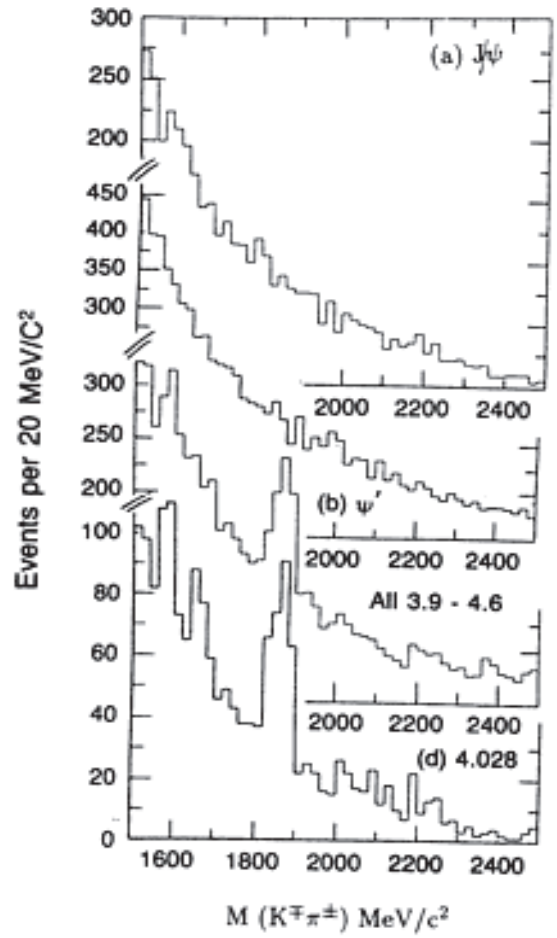

Slow Progress over 25 years

- Only 100s of charm decays before 1985
- Fermilab E691 - Silicon Microstrips
  10,000 reconstructed charm meson decays
- Fermilab E687,E791 and CLEO II
  100-200K reconstructed charm meson decays
- Fermilab FOCUS E831 and CLEO II.5
  1 Million reconstructed charm meson decays
- True interaction between Experimental results and theoretical ideas

Progress through Silicon Microstrips and Brute Force!

Lifetimes: Example of interaction between Experimental Results and Theory

$$\tau = \frac{h}{\Gamma_{SL} + \Gamma_{NL} + \Gamma_{PL}}$$

$$\frac{\tau(D^+)}{\tau(D^0)} = 2.55 \pm 0.04$$

$$\Gamma_{SL}(D^+) = (1.071 \pm 0.119) \times 10^{-13} GeV$$

$$\Gamma_{SL}(D^0) = (1.067 \pm 0.041) \times 10^{-13} GeV$$

$$\Gamma_{NL}(D^+) \neq \Gamma_{NL}(D^0)$$

Hadronic Decays

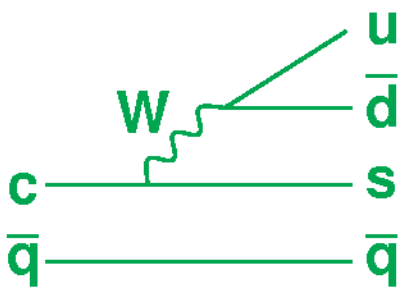

Spectator Decay
(Color Aligned)

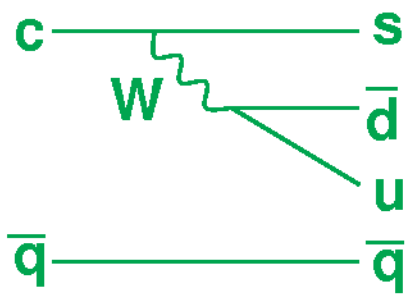

Internal Spectator
(Color Suppressed)

Spectator Decays

Coefficients modified by strong int.

W-exchange

W-annihilation

Annihilation Diagrams

Helicity and wavefunction suppressed

Amplitudes:

Colour Aligned

$$\propto \frac{1}{2}(C_+ + C_-)$$

Colour Suppressed

$$\propto \frac{1}{2}(C_+ - C_-)$$

$$C_+ \approx 0.74$$

$$C_- \approx 1.80$$

- **Pauli Interference** $\tau(D^+)/\tau(D^0) < 2.0$
- **W-Annhilation, ?Size?** Supressed by $\approx f_D{}^2 m_s{}^2 / m_c{}^4 \approx 10^{-3}$

Other Tests: Baryon Decays

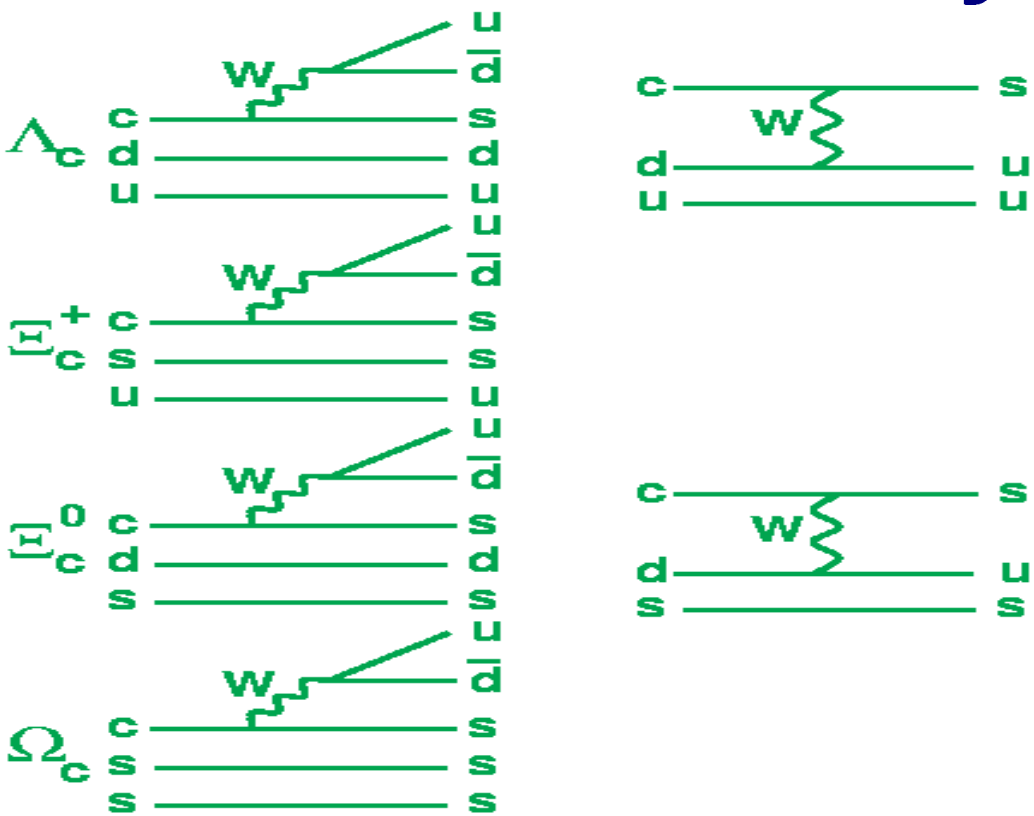

$\Gamma_{DEC} + \Gamma_{EXC} - \Gamma_{INT}^-$

$\Gamma_{DEC} + \Gamma_{INT}^+ - \Gamma_{INT}^-$

$\Gamma_{DEC} + \Gamma_{EXC} + \Gamma_{INT}^+$

$\Gamma_{DEC} + (10/3)\,\Gamma_{INT}^+$

Expect: $\tau(\Omega_C) \approx \tau(\Xi_C{}^0) < \tau(\Lambda_C) < \tau(\Xi_C{}^+)$

Latest Charm lifetime Results

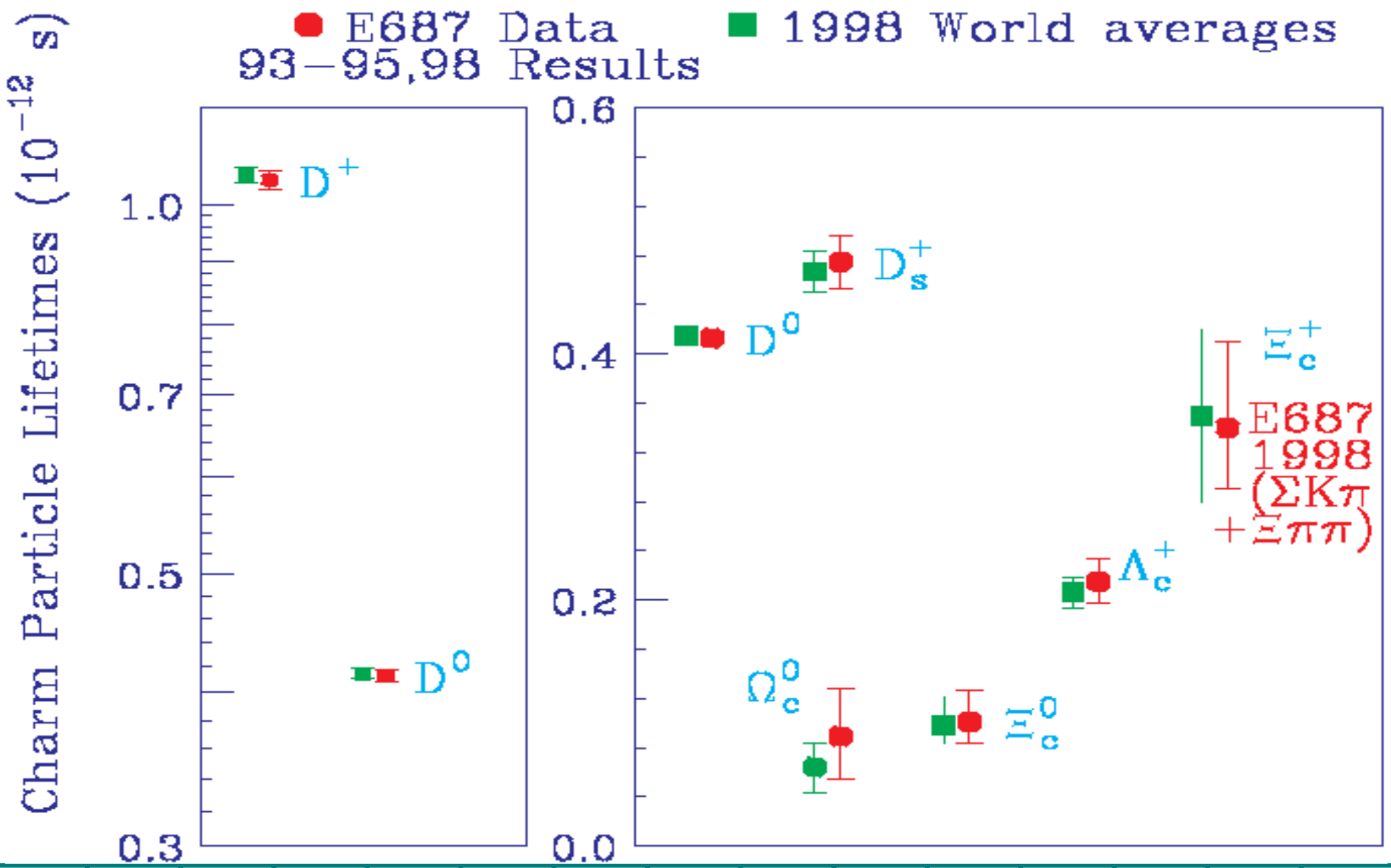

Lifetimes for s,c,b Particles

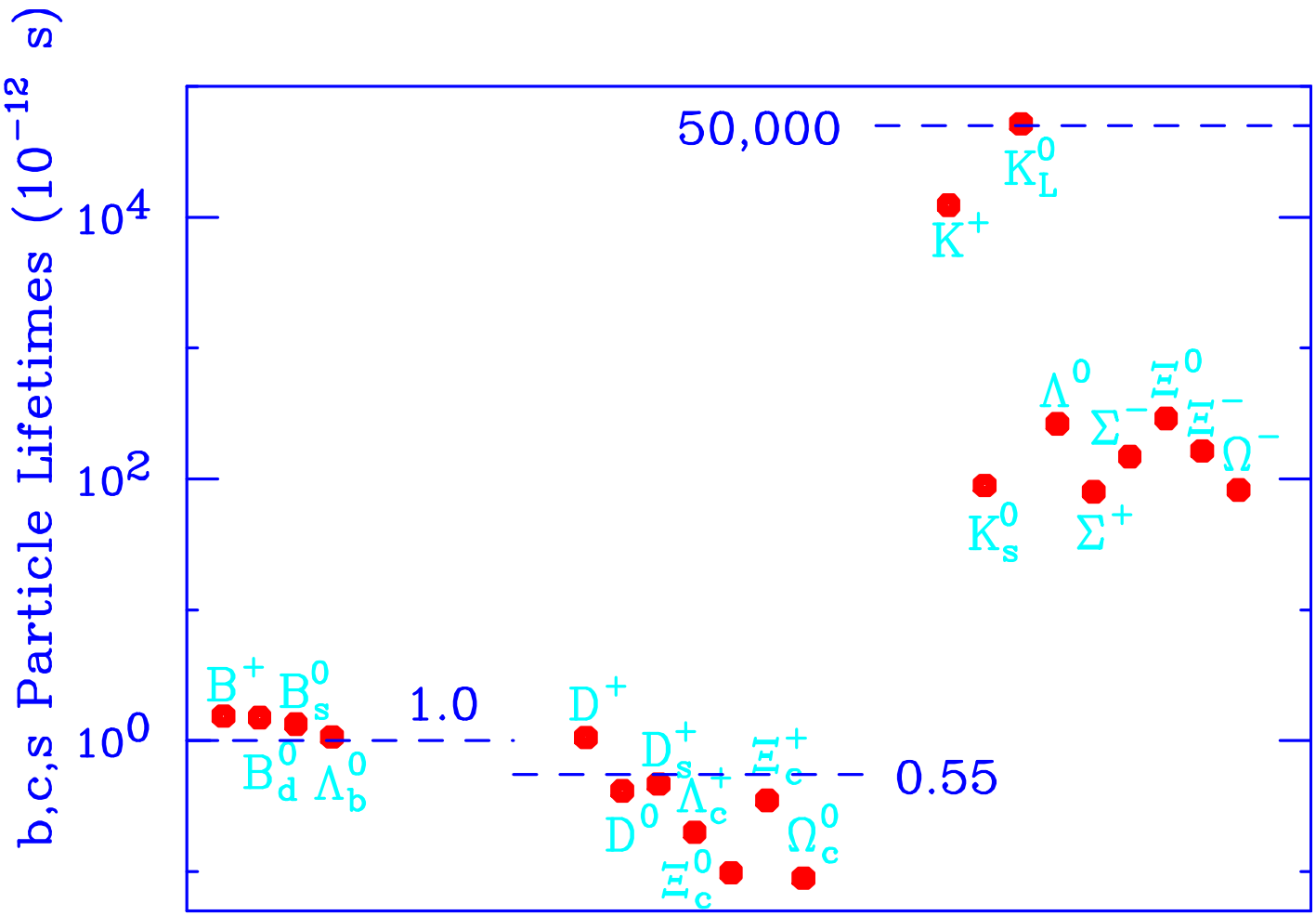

Ultra Preliminary Λ_c Lifetime

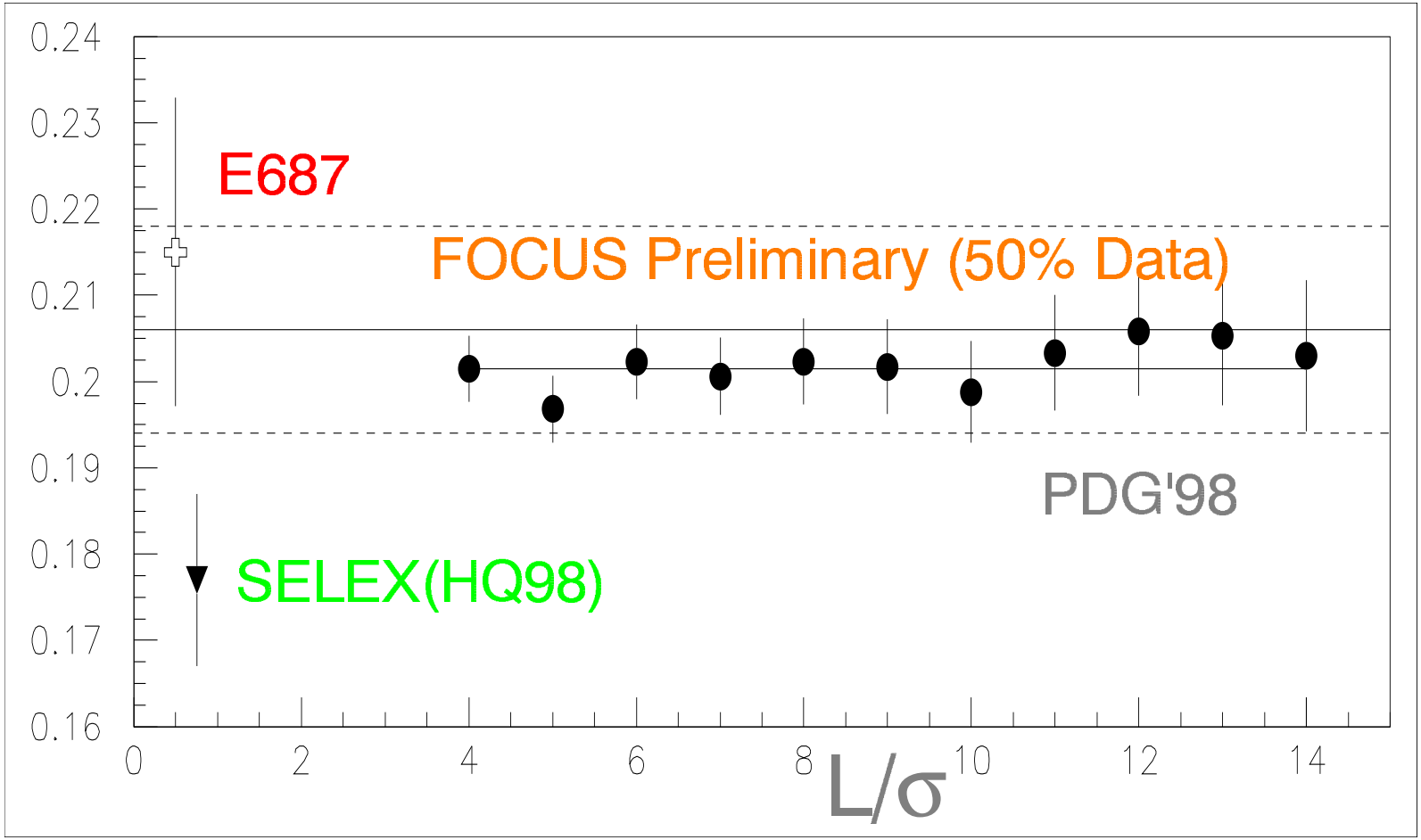

Doubly-Cabibbo-Suppressed Decays

- Historially, Cabibbo-suppressed decays yield surprising results leading to insights to hadronic decays
- DCSD BRs (normalized to CF modes) are very different from $\tan^4\theta \approx 2.4 \times 10^{-3}$

Mode	Collaboration	Branching Ratio
$D^+ \to K^+ \pi^+ \pi^-$	E687 & E791	$(7.5 \pm 1.6) \times 10^{-3}$
$D^+ \to K^+ K^+ K^-$	E687	$< 1.6 \times 10^{-3}$
$D^0 \to K^+ \pi^-$	CLEO2 & E791	$(7.2 \pm 2.5) \times 10^{-3}$
$D^0 \to K^+ \pi^- \pi^+ \pi^-$	E791	$(2.5 \pm 3.6) \times 10^{-3}$

Example:

BR(KK/ππ) = 2.79 ± 0.17 (PDG'98)

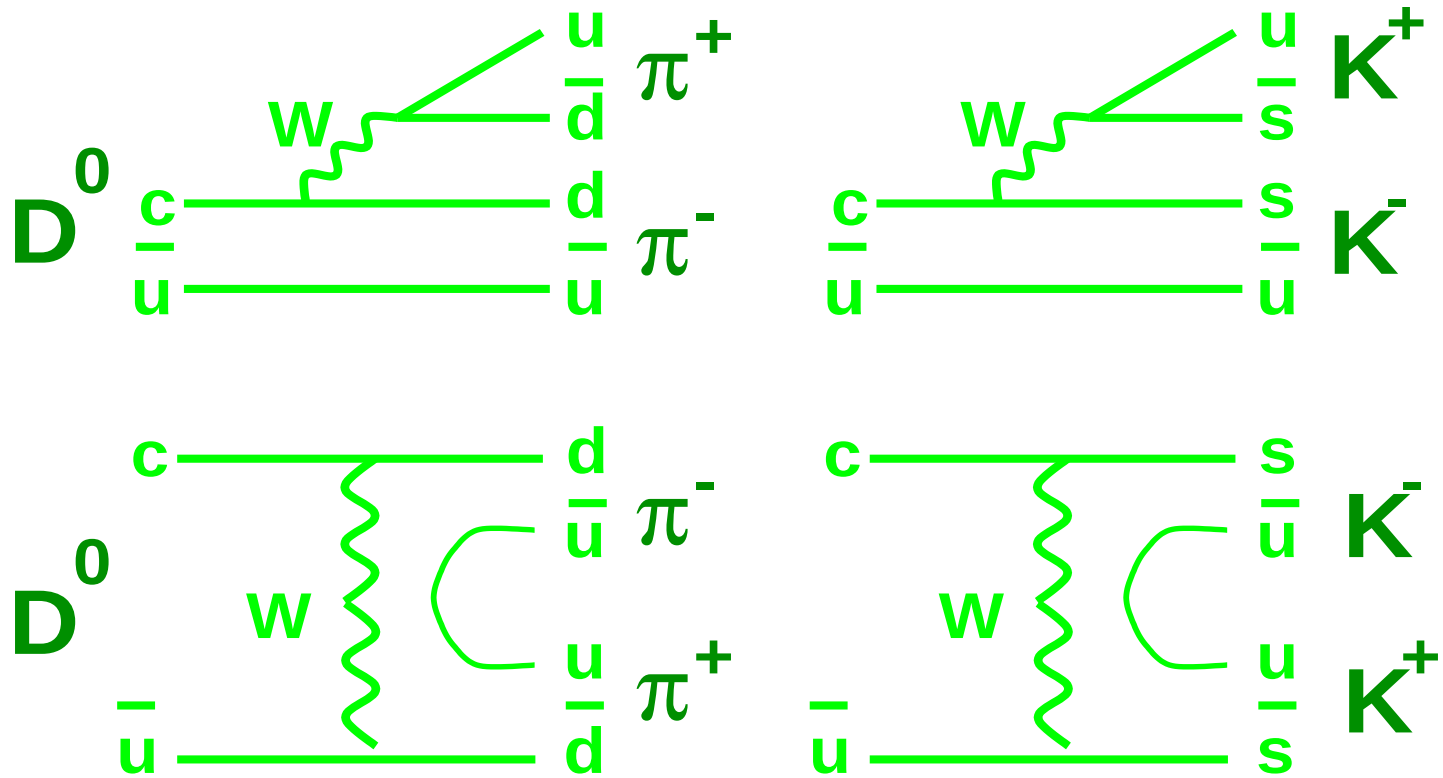

Due to FSI - need to include all KK and ππ modes

DCSD: $D^+ \rightarrow K^+ \pi^- \pi^+$

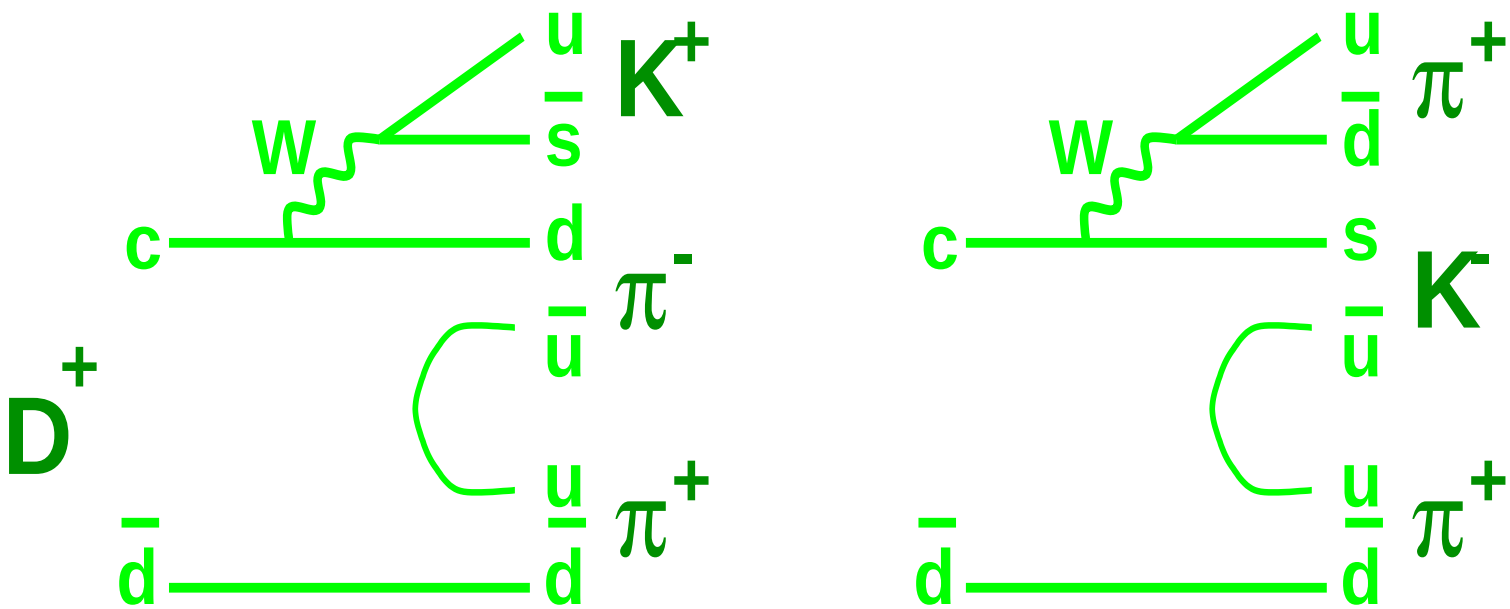

DCSD: no Pauli Interference, so expect:

$$BR(K^+\pi^-\pi^+/K^-\pi^+\pi^+) \cong \tau(D^+/D^0) = 2.55 \pm 0.04$$

If no contribution from W-exchange in D^0 decays

DCSD: $D^+ \to K^+ K^- K^+$

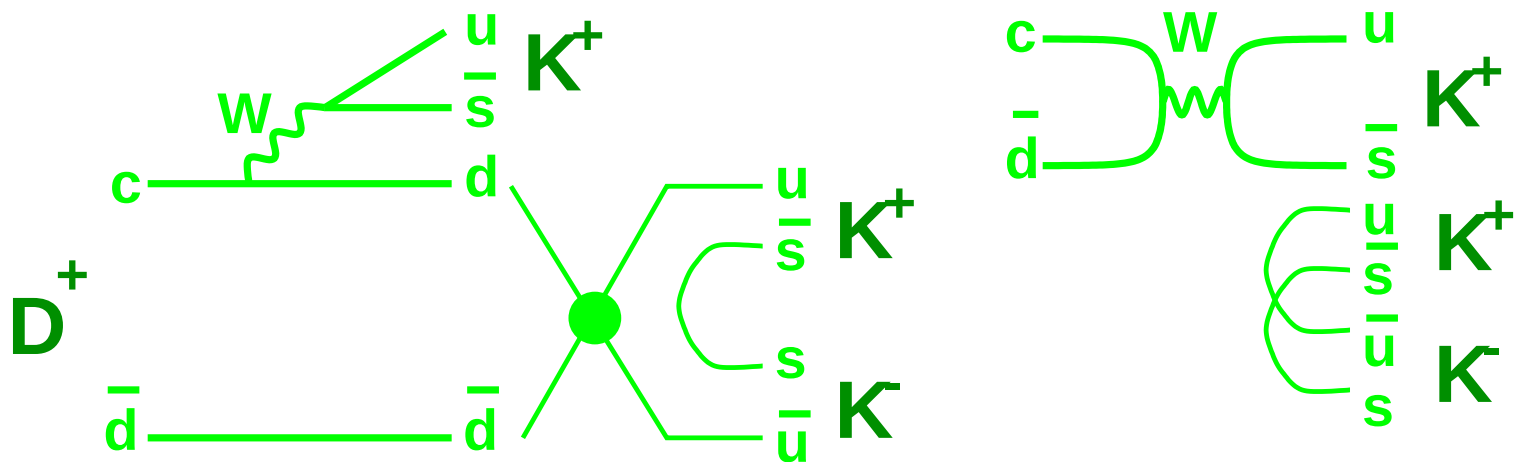

Expect BR(KKK/Kππ) to be small compared to $\tan^4 \theta_C$

Summary

- Starting to get results from FOCUS
- Complete data set ready in 2 weeks but copies need more time
- Fermilab FOCUS group members:

Joel Butler Harry Cheung Erik Gottschalk

Rob Kutschke

Peter Kasper Irwin Gaines Peter Garbincius

Art Kreymer Lynn Garren