FPix DCS Subgroup Report

Charles Newsom/JC Yun 10/12/05

- Introduction
- Current status
- Plan

CMSTracker System

One step back: best (?) use of the information

Leave hardwired information for safety (PLCs), DCU information for SC and monitoring
FEC Supervisors should be controlled by the Run Control and not PVSS

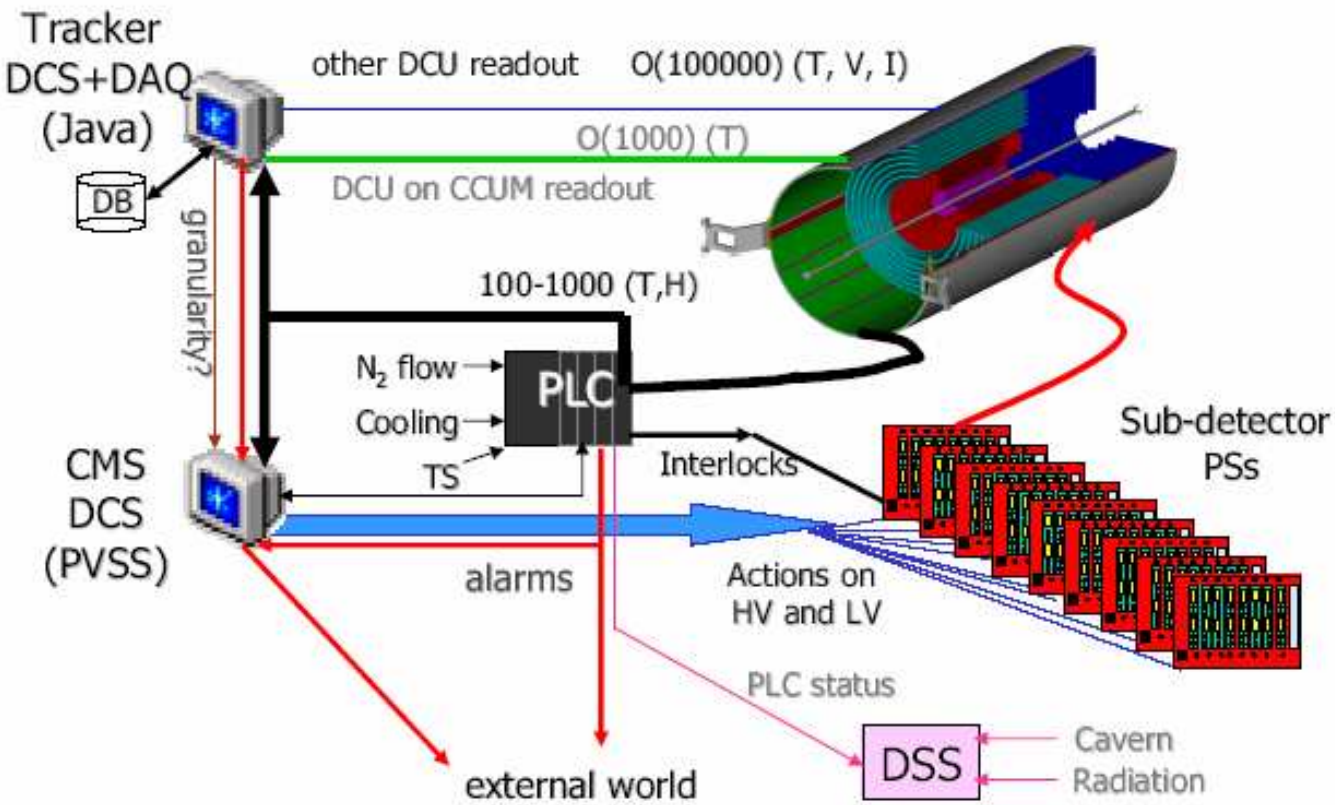

Roberto Chierici

11.69 x 8.26 in

CMS RCMS/DCS Layout

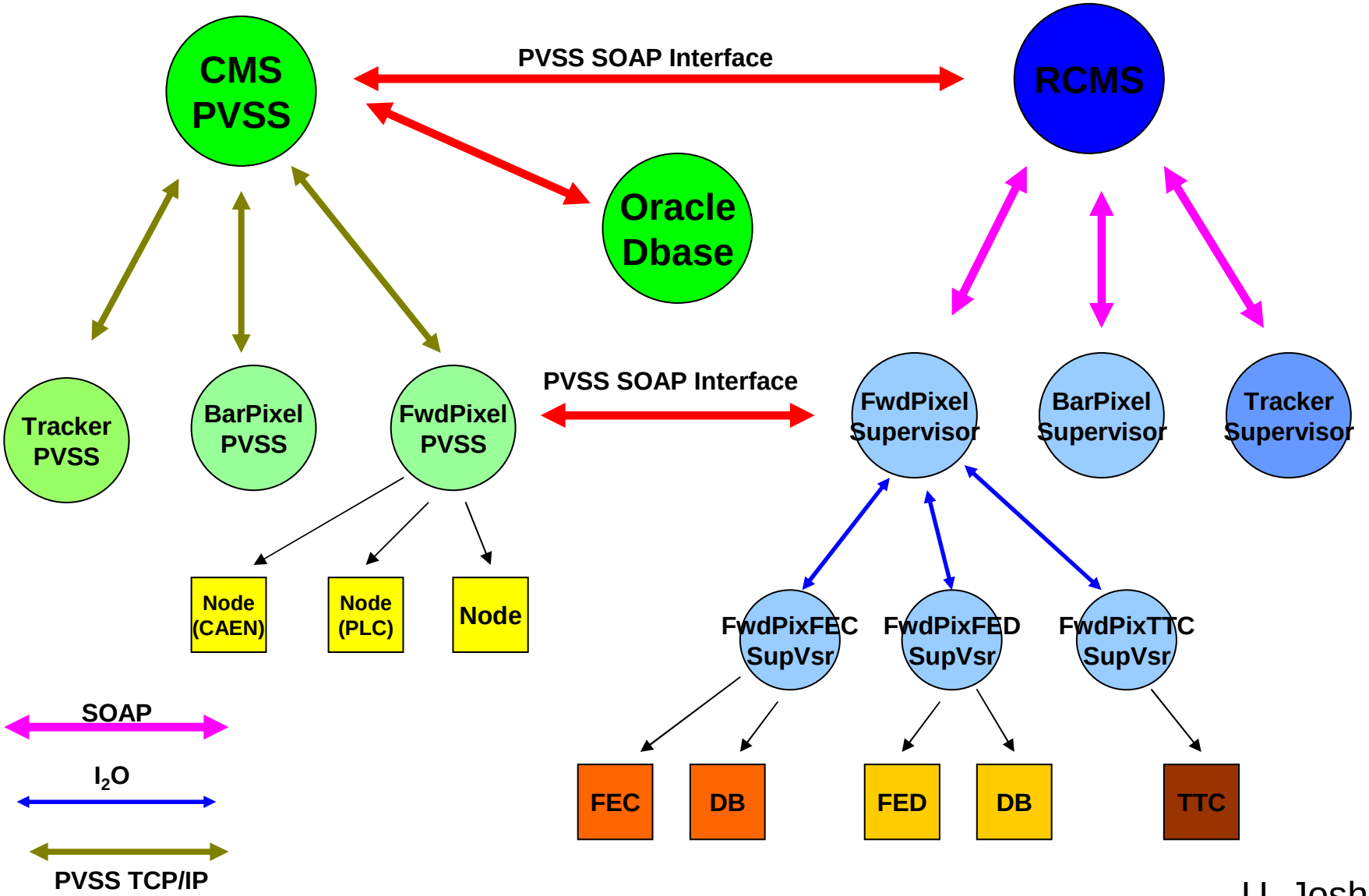

U. Joshi

FPix DCS system hardware

- Control

  CAEN HV, LV

- Monitor

  Siemens PLC

  -> temperature of port cards

  -> humidity

- Interlock

  Siemens PLC

  -> when temp, humidity out of bound (hardwired)

FPix DCS software

+ monitor and control CAEN, Siemens PLC etc.
+ communication with CMS DCS through PVSS
+ communication with RCMS XDaq
+ update DCS info into Oracle Database
+ design run conditions and HV, LV control scheme
+ FPix main control panel design

--- follow CERN system as much as we can

....

+ software interlock system
+ software trigger inhibit (out of bound etc.)
+ heartbeat checking mechanism (DCS supervisor)
+ ..

PVSS course at FNAL (7/25 - 8/5 : 2 weeks)

- The first PVSS class offered at Fermilab
- 3 sections (PVSS, JCOP framework, Finite State Machine)
- About 10 people took the class taught by Sascha Schmeling from CERN.
- During the class, Christian succeed in controlling a Chiller with PVSS through RS232 communication. Also we could control CAEN system later.

FPix DCS/PVSS group

Lucien Cremaldi, Mike Eads, Dongwook Kim, Sergey Los, Sudhir Malik, Charles Newsom, David Sanders, Ping Tan, Christian Veelken, JC Yun

(UC Davis, FNAL, Johns Hopkins, Iowa, Mississippi, Nebraska, Northwestern)

Contact person: Charles Newsom, JC Yun(software)

Biweekly FPix DCS/PVSS meeting:

Tuesday 11:00 – 12:30 at WH11SE

FPix DCS/PVSS work plan

1) Testbeam setup

-> to gain experience

-> upgrade testbeam slow control system

2) SiDet setup

-> for integrated system setup:

XDaq – PVSS – Database - DSS

3) FPix setup

-> commissioning FPix system

Testbeam setup

Work done:

PVSS setup in MTest testbeam area:

* PVSS installed on a dedicated PC
* CAEN system: through PVSS we can control and monitor HV and LV channels
* Chiller: we can turn on an off running PVSS code --- this is through serial communication

* Siemens S7 PLC:
    * Initialized the PLC through serial pc adaptor.
    * through ethernet OPC, PVSS can talk to the PLC

Work to be done:

* Siemens S7 PLC:
    * humidity, temp, step motor control, simple interlock system
* Alarms (sounds, automated e-mail (??) etc.)

Hardware

Siemens S7/300

- Programable Logic Controller
  (Interlock Logic)
- Ethernet Interface Module
- 8x16 Bit RTD Analog Input Module
  (Temperature Sensors)
- 8x13 Bit general Purpose Analog Input/Output Module
  (Humidity Sensor, Peltier Element)
- 16x Digital Input/Output Module
  (Booster Pump)
- three Function Modules for Step Motor Control
- 24V Power Supply Module

CAEN

- SY 2527 Crate with HV/LV Boards

Other

- NESLAB RTE-140 Chiller with RS-232 Interface

Current Test Installation

- Programable Logic Controller
- Ethernet Interface Module
- 16x Digital Input/Output Module
- 24V Power Supply Module

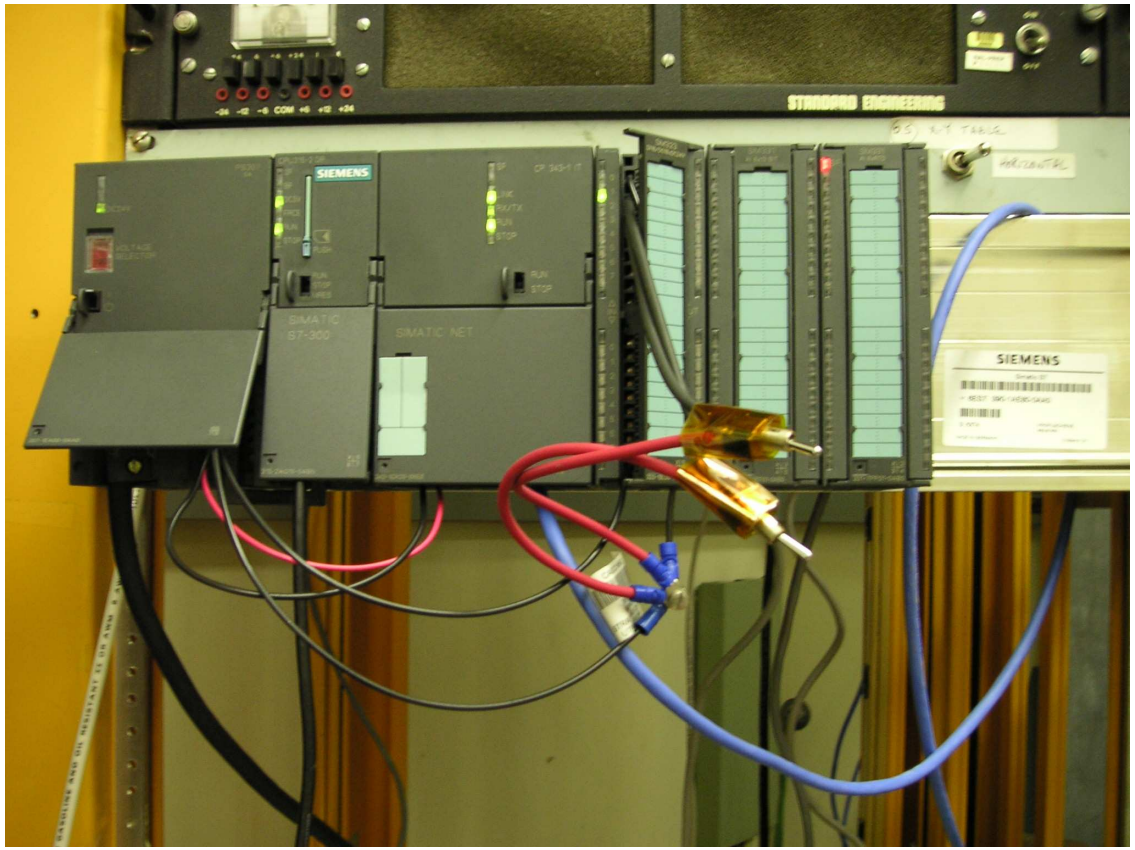

Christian Veelken

Testbeam PVSS work assignment

CAEN --- **Ping**

Serial

- **Chiller** --- **Christian**

Siemens

- **Peltier**
- **Humidity** --- **Mike, Sudhir**
- **Temp**

- **Motor control** --- **Dongwook**

Alarms, Intertask communications --- **jc**

Main panel design --- **Christian**

SiDet setup

Will clone testbeam setup

* Control CAEN HV, LV
* monitor temp, humidity (Siemens)
* A simple interlock system

+ communication to XDaq
+ Oracle database

Charge:

DCS supervisor: Christian Veelken
XDaq supervisor: Ping Tan / Dongwook Kim
DCS – XDaq interface: Dongwook Kim

Schedule:

first try out in 06/2005

Interface to DCS ("WarmStart")

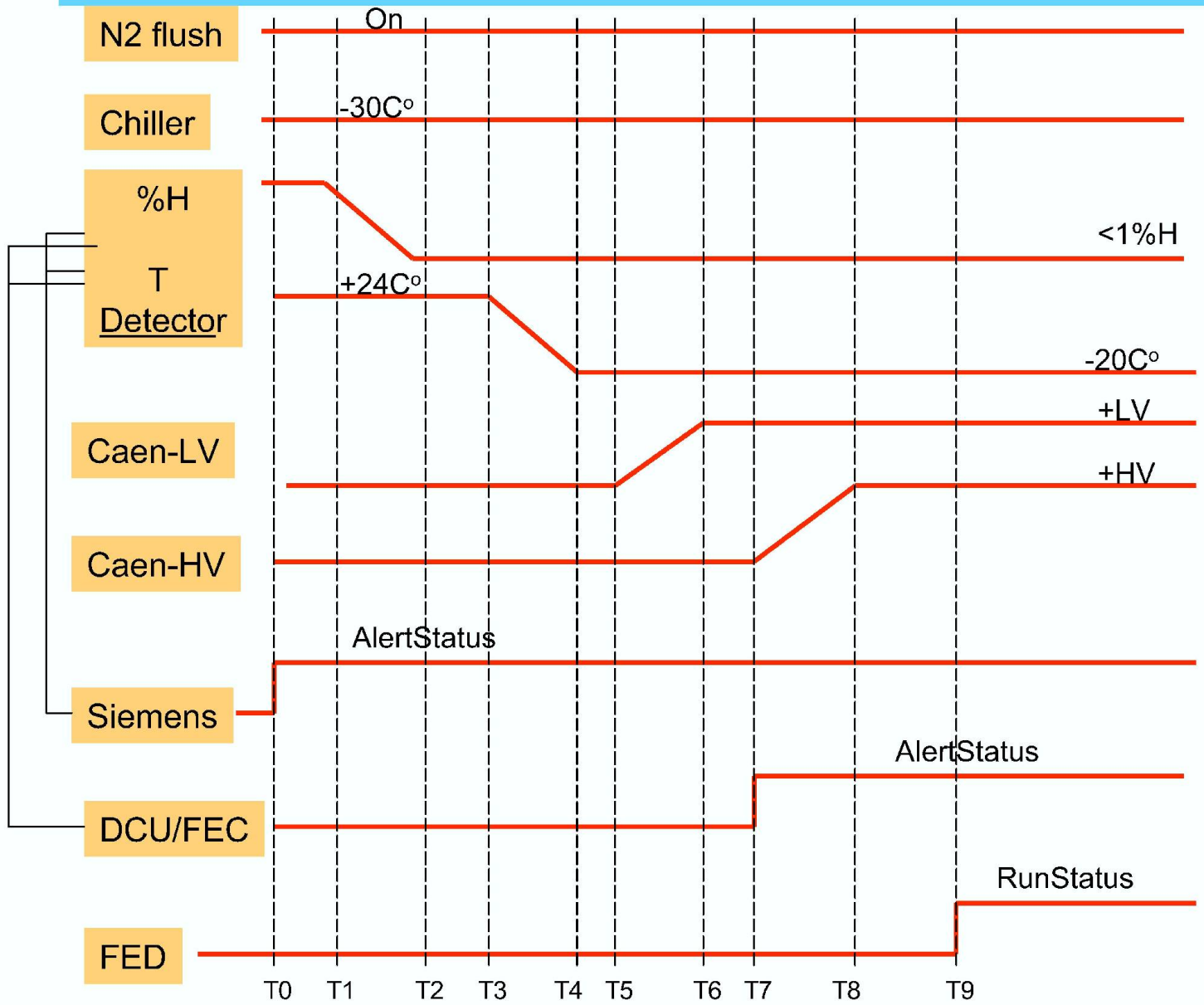

XDAQ2PVSS operation

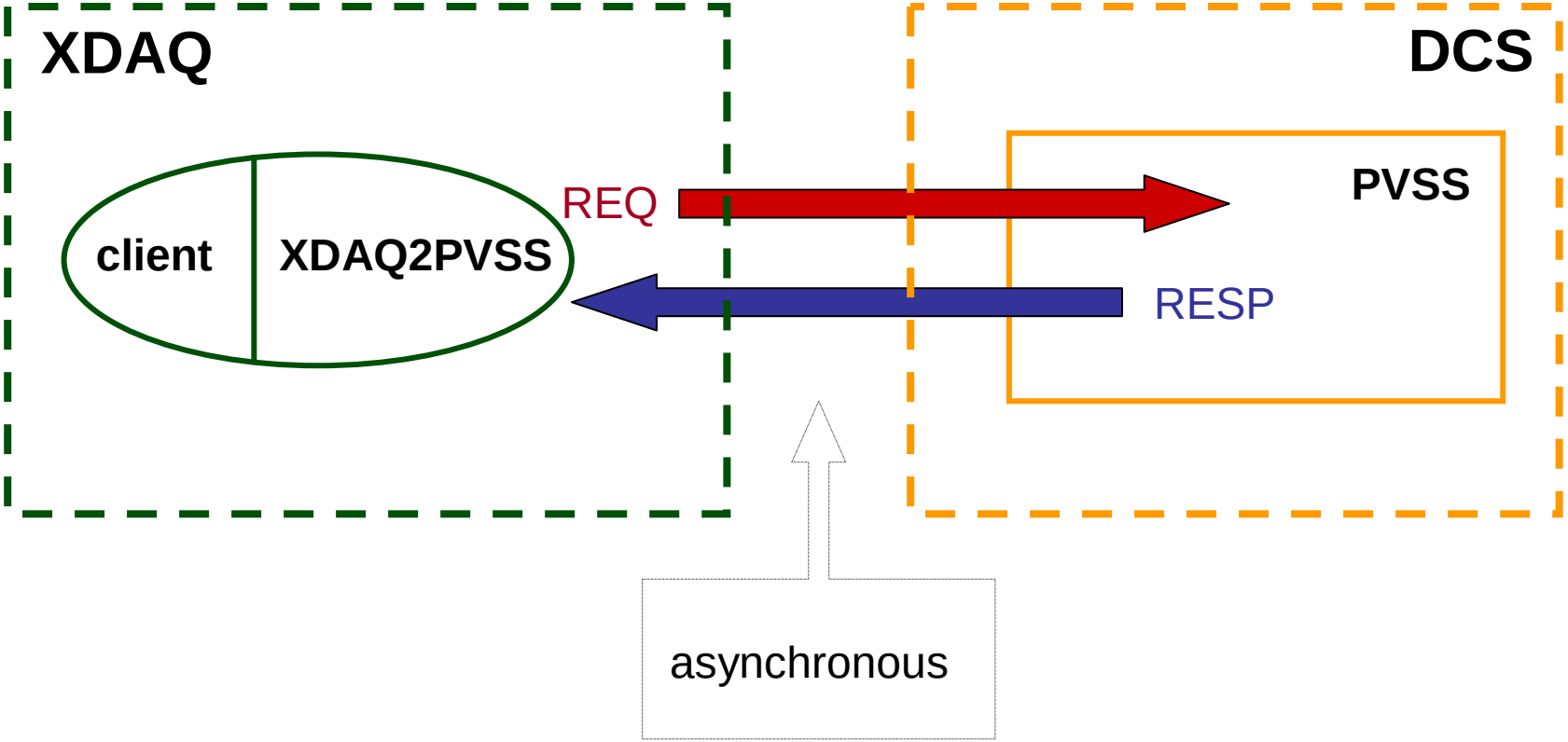

- single client/single request

Dongwook Kim

From Peter Rosinsky

Discussion

- Finish up testbeam setup and move on to SiDet system ASAP.
- Need more interaction with other CMS DCS groups - to conform to CERN, CMS standards as much as we can.
- We are making a good progress but there are a lot to learn.